ROTAX

REPAIR MANUAL
for
ROTAX ENGINE
TYPE 275

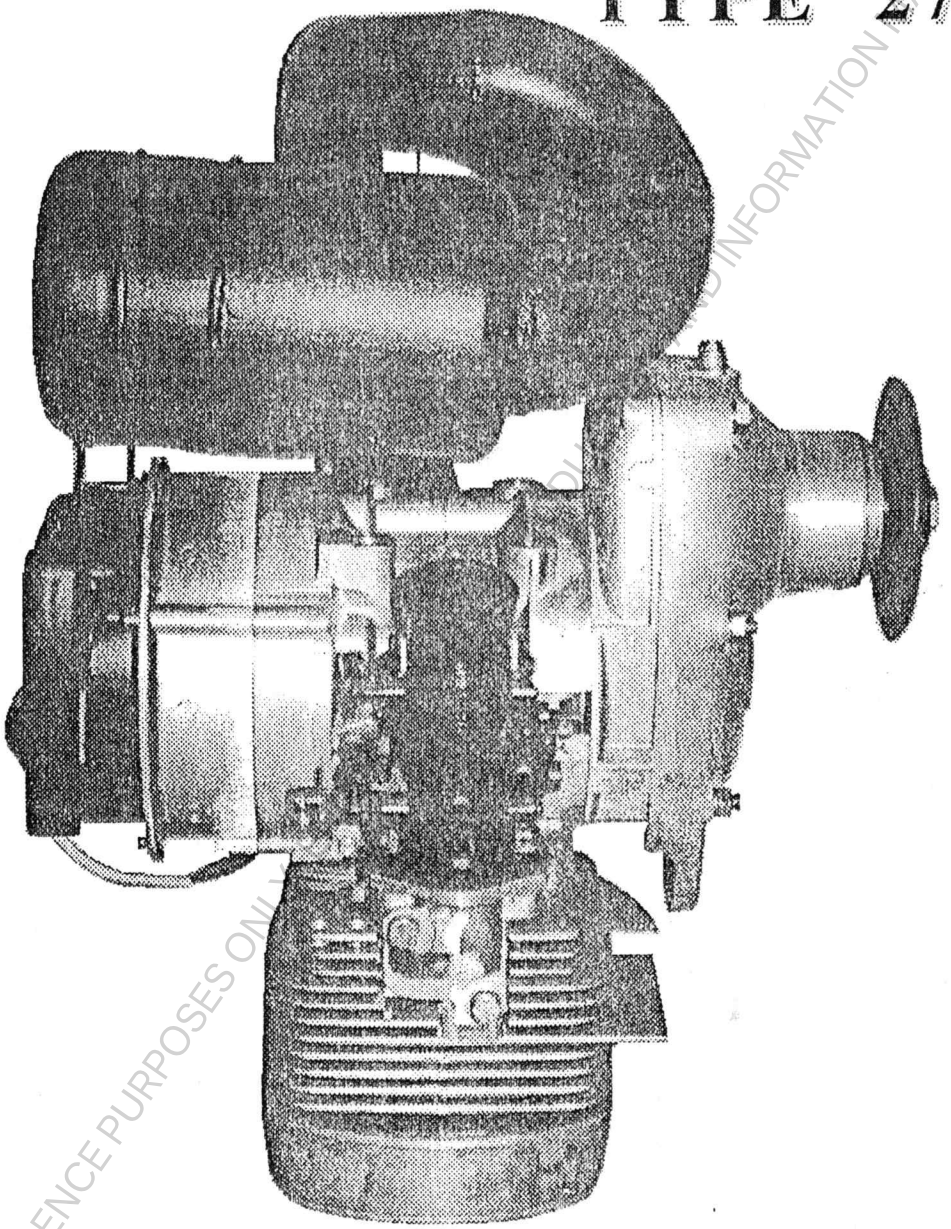

Edition: 10 1991

BOMBARDIER-ROTAX GMBH
MOTORENFABRIK
A-4623 GUNSKIRCHEN — AUSTRIA
Telefon: ..43-(0)7246-271-0*, Telefax: ..43(0)-7246-370
Telex: 25546 brgk a, Telegr.: Bombrotax Gunskirchen

STAATLICHE AUSZEICHNUNG

Table of contents

Introduction

This repair manual is meant to assist the professional to do works until the engine overhaul, supposing respective formation and experience, as well as competent training and an adequate working place. Additional information is given in the Operator's Manual and the Spare Parts List. The position of the parts in the spare parts list is according to the installation situation.

Only original spare parts must be used!

The national regulations of the competent Authorities for Civil Aviation have to be observed.

1) Repair tools:

To allow a professional repair it is necessary to use impeccable tools. Apart from the tool kit supplied with the engine, the following special tools are necessary for repair of ROTAX engine type 275:

1.1) Repair tools for the engine:

See spare parts list no. 656, chapter „repair tools", too. The position numbers of the following tools appear with description and part number in the instructions.

NOTE: Simple fixtures and devices mentioned in the text but not shown on this page have to be provided yourselves.

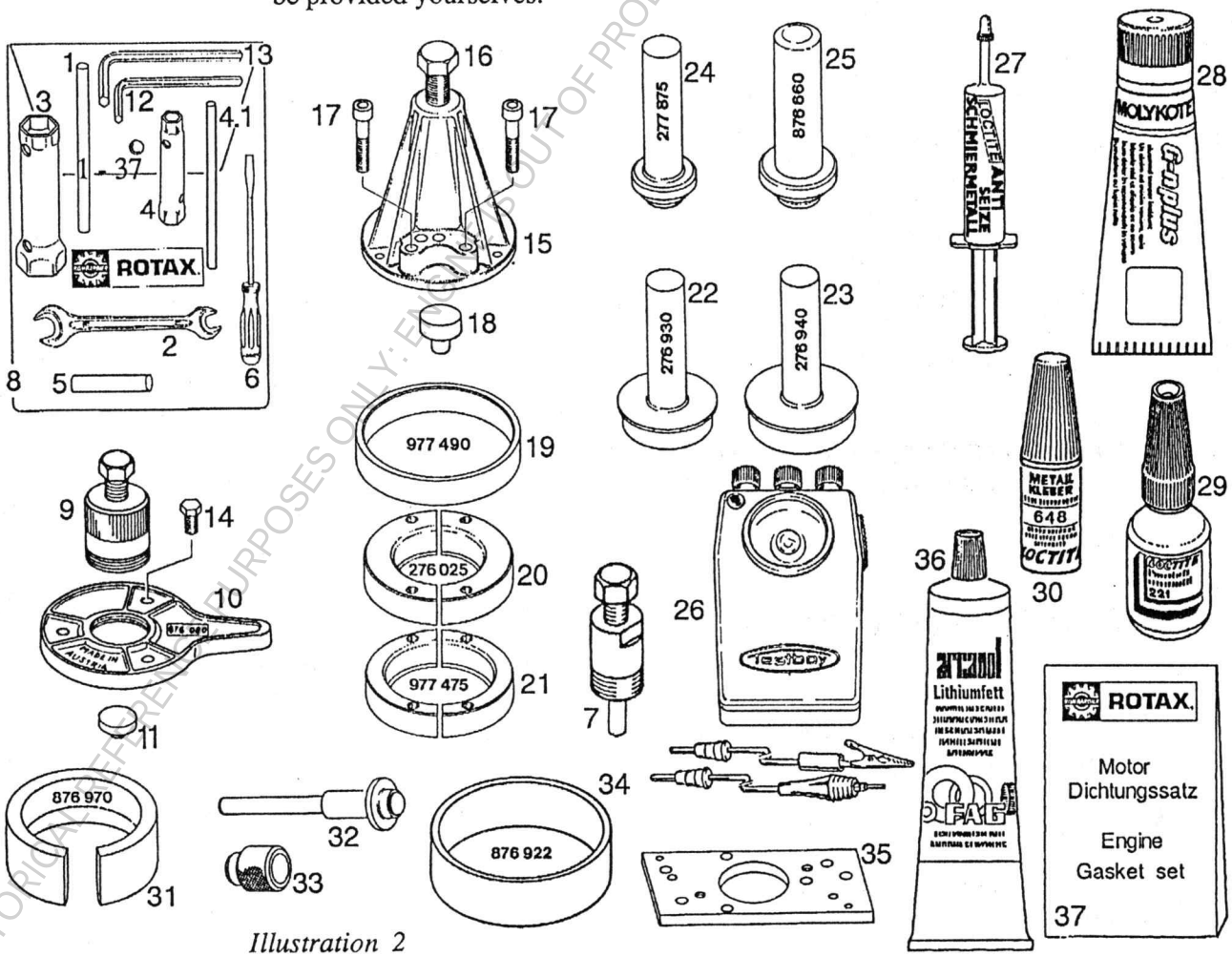

Illustration 2

POS.	PART NO.	DESCRIPTION	QTY.
1-13	877 070	TOOL SET	1
1	977 420	BOLT 8X130-10	1
2	276 065	FORK WRENCH 10X13	1
3	876 212	SOCKET WRENCH 21X26	1
4	876 225	SOCKET WRENCH 10X13	1
4.1	977 425	BOLT	1
5	877 080	THRUST PIN to remove drive gear	1
6	876 200	SCREW DRIVER	1
7	877 065	PULLER M36X1,5 ASSY.. for propeller hub	1
8	876 197	TOOL BAG	1
9	876 065	PULLER M42X1,5 ASSY. for magneto housing	1
10	876 080	PULLER RING	1
11	876 557	PROTECTION MUSHROOM for crankshaft magneto side	1
12	277 790	ALLEN HEAD KEY 4	1
13	277 810	ALLEN HEAD KEY 6	1
14	940 581	HEX. SCREW M8X16 DIN 933 for puller ring	3
15-16	876 298	PULLER ASSY.. for ball bearing	1
16	940 755	HEX. SCREW M16X1,5X150 DIN961	1
17	840 680	ALLEN SCREW M8X40 DIN 912 for puller	4
18	876 552	PROTECTION MUSHROOM for crankshaft p.t.o. side	1
19	977 490	RING for ring half	1
20	276 025	RING HALF for ball bearing 6206 / 30-62-16, magneto side	2

POS.	PART NO.	DESCRIPTION	QTY.
21	977 475	RING HALF for ball bearing 6306 / 30-72-19, p.t.o. side	2
22	276 930	INSERTION JIG ASSY.. for crankcase ring 960 765, magneto side	1
23	276 940	INSERTION JIG ASSY. for crankcase ring 827 820, p.t.o. side	1
24	277 875	INSERTION JIG ASSY.. for oil seal 230 425, crankshaft magneto side	1
25	876 660	INSERTION JIG ASSY.. for oil seal 850 050	1
26	876 910	IGNITION TIMING EQUIPMENT without battery 4,5V	1
27	297 431	LOCTITE ANTI-SEIZE 76710 to prevent metal galling	1
28	297 433	MOLYKOTE G-N, 1100 GR., SLIDE PASTE	1
29	899 785	LOCTITE 221 VIOLET, 10 CCM., low strength bond	1
30	899 788	LOCTITE 648 GREEN high strength bond, 5 gr.,	1
31	876 970	PISTON RING SPANNER 72 MM to mount piston in cylinder	
32-33	877 015	CIRCLIP INSTALLATION TOOL ASSY.. for installation of piston pin circlips 18 mm	1
32	877 010	CIRCLIP INSTALLATION PUSHER 18MM	1
33	877 020	CIRCLIP INSTALLATION SLEEVE 18 MM.	1
34	876 920	CENTERING RING, FOR STATOR PLATE	1
35	876 705	PULLER PLATE for crankshaft and crankcase	1
36	897 330	LITHIUM-BASE GREASE to prvent leakage current, 250 GR.,	1
37	292 063	GASKET-SET for the engine	1

1.2) Repair tools for the gearbox:

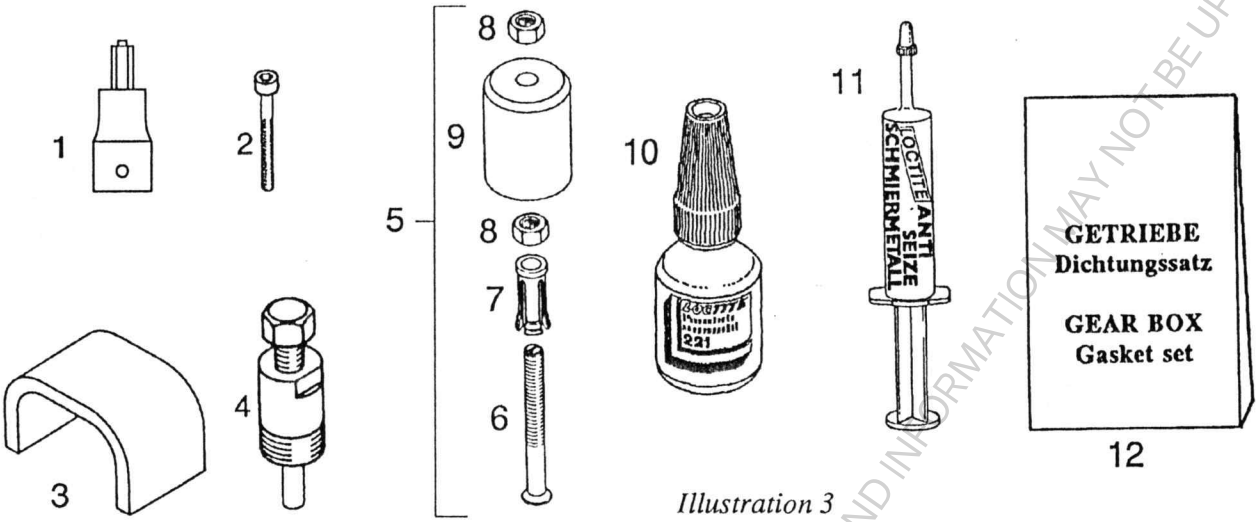

Illustration 3

POS.	PART NO.	DESCRIPTION	QTY.
1	877 215	ALLEN SOCKET 3/8X12,5, WITH PILOT for allen screw 1/2-20UNF of drive gear	1
2	241 875	ALLEN SCREW M6X70/45 for gear cover	2
3	876 880	MOUNTING YOKE for dog gear	1
4	877 065	PULLER ASSY. M36X1,5 KPL. for propeller hub	1
5	476 040	PULLER ASSY. for needle bearing 25X32X16	1
6	276 380	BOLT	1
7	476 050	EXTRACTOR SLEEVE for needle bearing 25X32X16	1
8	242 090	HEX. NUT M10 DIN 934	2
9	476 060	PULLER BELL for bearing puller	1
10	899 785	LOCTITE 221 VIOLET, 10 CC., low strength bond	1
11	297 431	LOCTITE ANTI-SEIZE 76710, 10 GR to prevent metal galling	1
12	995 765	GASKET SET for reduction gearbox	1

1.3) Further tools required:

torque wrench - up to 100 Nm (900 in.lbs)

socket wrench insert 27 mm a/f fitting torque wrench

fork wrench 22/24 mm a/f (= across flats)

socket wrench 8 mm, 10 mm and 13 mm a/f

rubber hammer (mallet)

Allen key 4 mm, 5 mm and 6 mm a/f

screwdriver

capstan screwdriver

circlip pliers

2) Engine dismantling:

2.1) Preparation:

Clean engine before disassembly

Remove muffler and exhaust manifold
TOOLS: Allen key 6 mm
fork wrench 13 mm

Remove rewind starter and magneto housing
TOOL: Allen key 5 mm

Remove intake manifold with carburetor
TOOL: Socket wrench 13 mm

Remove starting pulley
TOOL: Allen key 6 mm

Screw the puller ring to the magneto housing with hex. screws M8x16. By no means screws longer than 16 mm (M8x16!) must be used as in such a case the coils beneath would be damaged!

TOOL: Puller ring 876 080, pos. 10, chapter 1.1).

2.2) Dismantling of reduction gearbox:

a) Drain oil.

b) Unscrew the 4 hex. nuts M8 with lockwashers and remove the complete gearbox from the engine.

c) Unscrew the 2 hex. nuts M8 with lock washers and drive out the gearbox cover on the threads foreseen. In case the ball bearing, pos. 5, fits tight on the propeller shaft, pull off the ball bearing and remove the shim.

2.2.1) Removal of drive gear:

Fix crankshaft using the puller ring and a suitable extension, remove Allen screw, pos. 13, for drive gear with Allen socket key 3/8", pos. 1, chapter 1.2 (with shoulder), turn it out completely, insert thrust pin 877 080 and pull off the drive gear using Allen screw, pos. 5, chapter 1.1.

2.3) Removal of ignition unit:

Remove hex. nut M18 x 1,5.
TOOL: Socket wrench insert 27 with extension

Place protection cap on crankshaft; screw puller into magneto housing holder and pull off magneto housing (see ill. 4).

TOOLS: **chapt. 1.1**
Protection cap ..... 976 557 ..... pos. 11
puller for magneto housing ..... 876 065 ..... pos. 10
fork wrench or socket wrench insert 24 mm

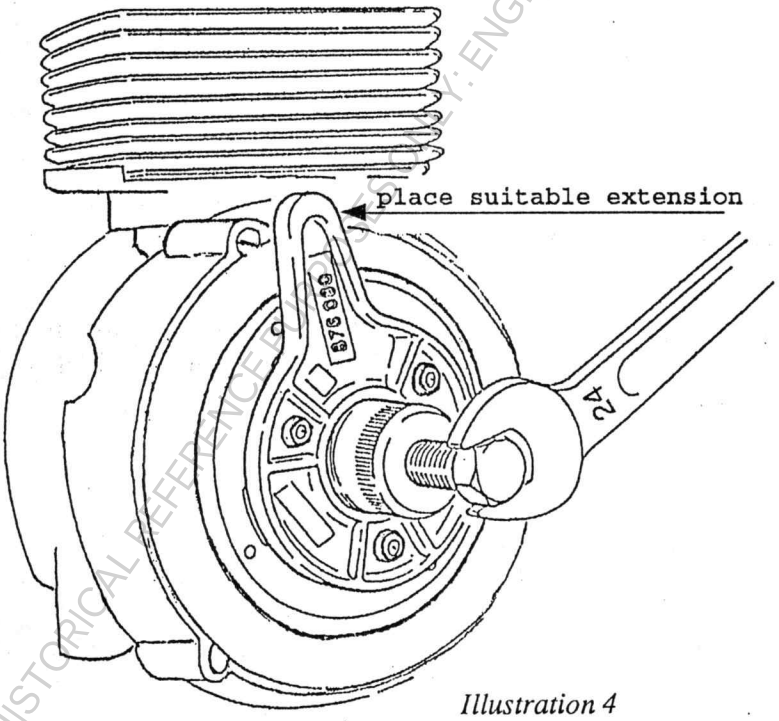

Mark stator plate position to crankcase (if not existing) for re-assembly. Screw off stator plate and pull through wiring harness.

TOOLS: Allen key 4 mm,
screwdriver

Illustration 4

2.4) Dismantling of cylinder/piston components:

Unscrew cylinder head nuts.

TOOL: Socket wrench 13 mm

Take off cylinder head, cylinder head gasket, cylinder and cylinder base gasket. Cover crankcase aperture with a clean cloth.

Remove piston pin circlips (see ill. 5).

TOOL: Small screwdriver shaped as shown on ill. 5).

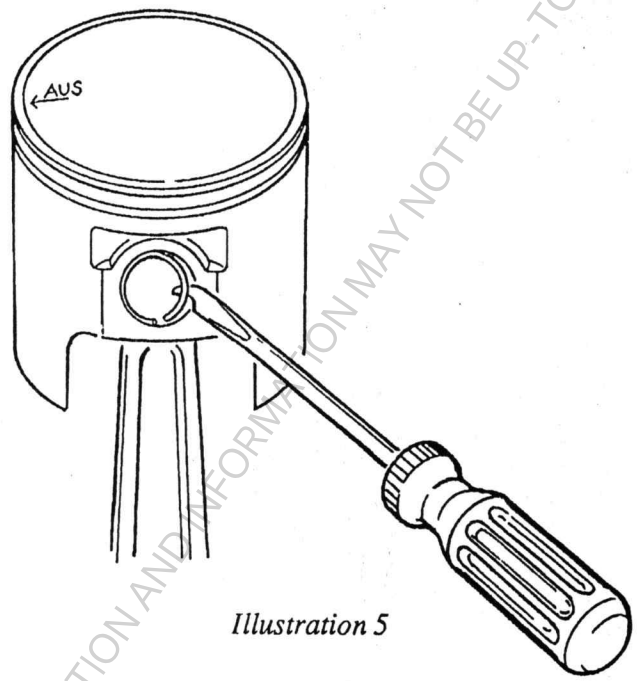

Illustration 5

Push piston pin out by hand.

TOOL: Suitable punch for piston pin

ATTENTION: When pushing out the piston pin, the piston must be firmly held by hand to prevent bending of connecting rod. See ill. 6.

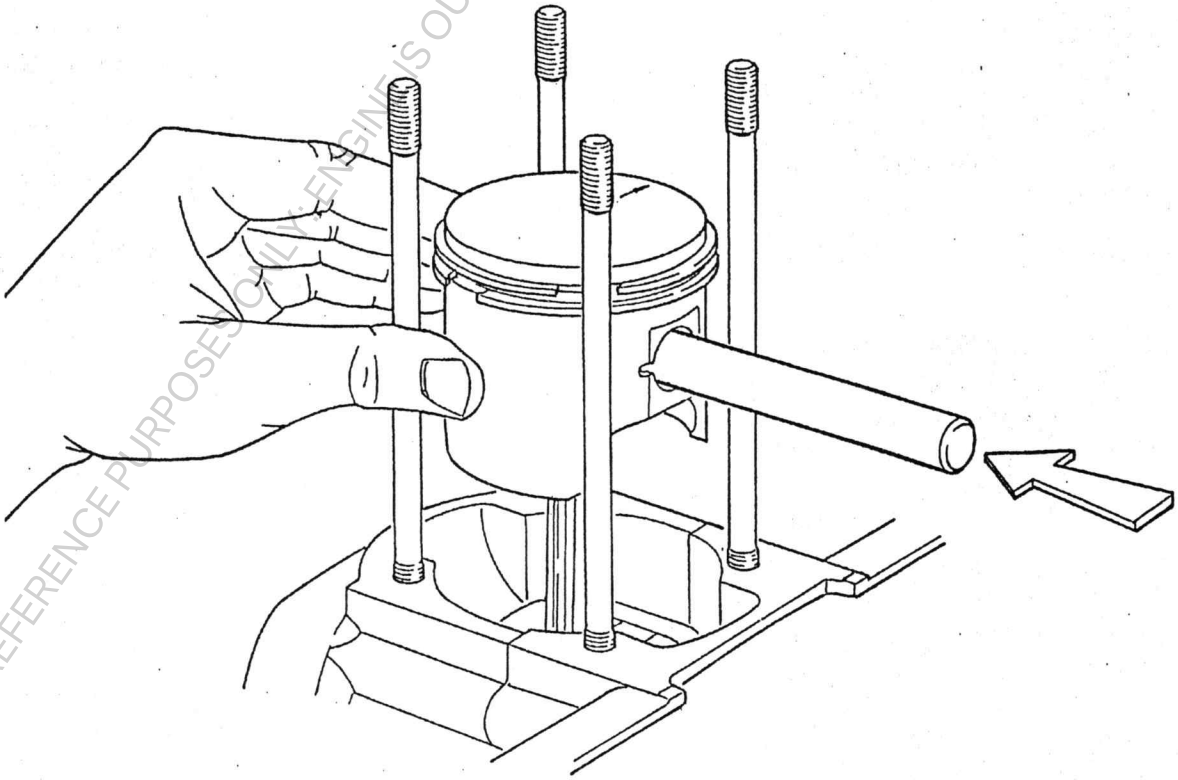

Illustration 6

2.5) Dismantling of crankcase and crankshaft removal:

Remove the 5 hex. screws with socket wrench 13 mm. Push crankshaft out of crankcase half, p.t.o. side, with puller.

PROCEDURE: Screw puller and puller plate together and fix them on crankcase (2 hex. screws M8 x 25). Then drive crankshaft out of the crankcase (see ill. 7).

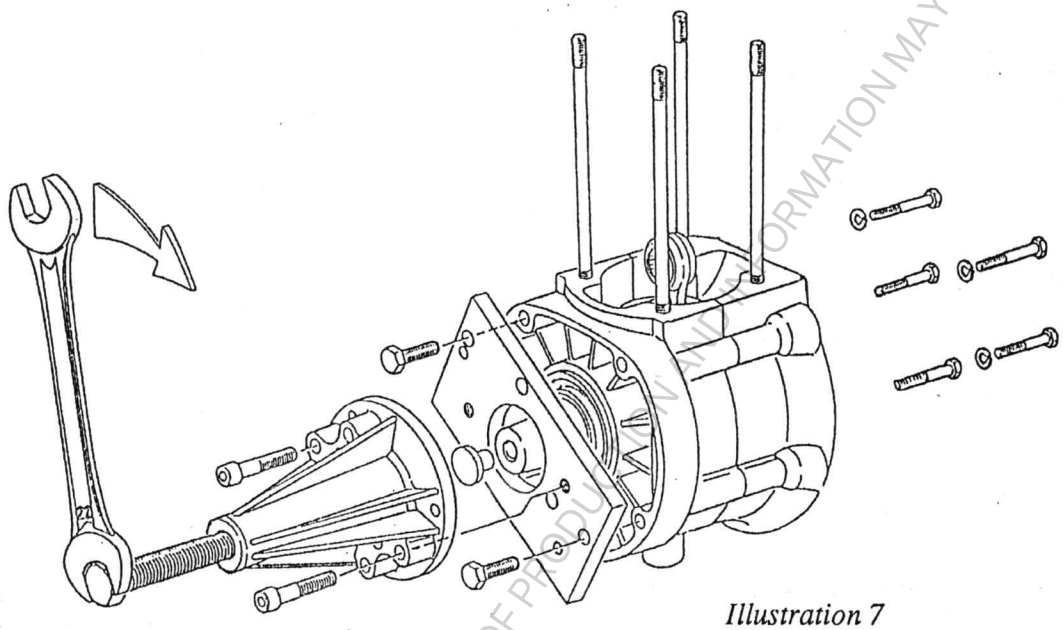

Illustration 7

Take off crankcase gasket.

After removing the crankshaft from the crankcase, p.t.o. side, remove puller with plate. The puller itself need not be screwed off the plate.

The puller with plate is then placed on crankcase, mag. side, and is fixed by 2 screws M8 x 100.

ATTENTION: To avoid damage of the crankcase sealing surface, shims have to be used by all means and the nuts have to be tightened by hand (see ill. 8).

TOOL: chapt. 1.1

Pos.	part no.	description	qty.
35	876 705	puller plate	1
15-16	876 298	puller	1
18	876 557	protection mushroom	1
11	876 557	protection mushroom	1
	440 420	slotted head screw M8 x 100	2
	250 311	shims 8,4	2
	242 201	hex. nuts M8	2

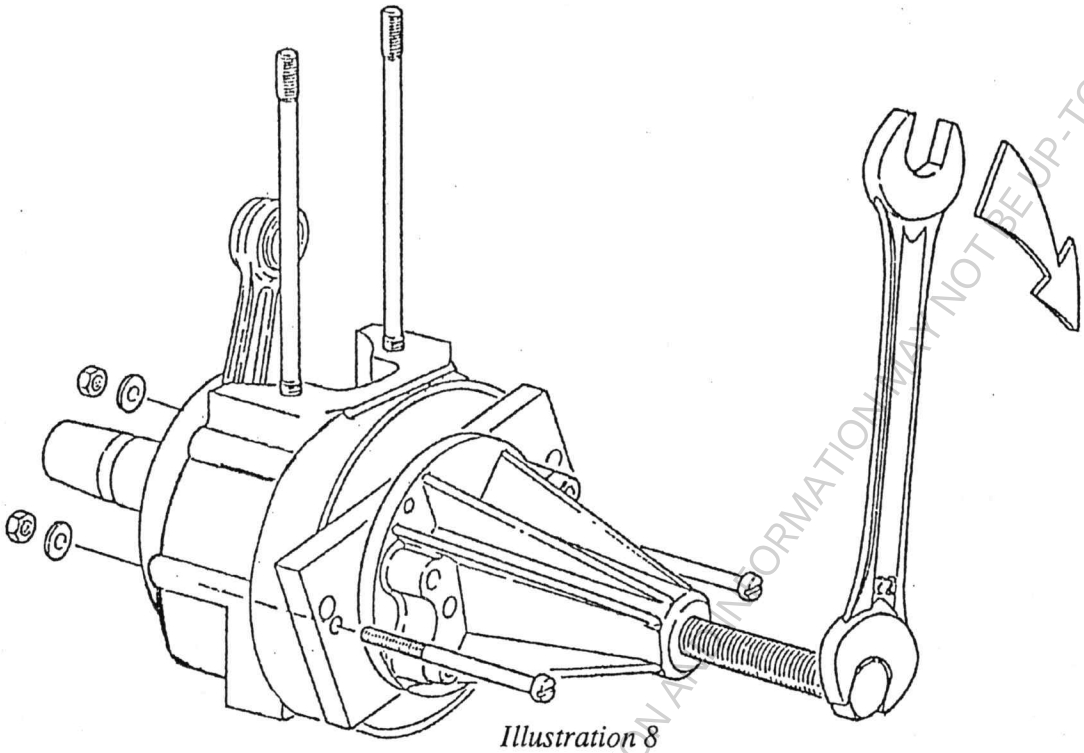

Illustration 8

2.6) Removal of ball bearings from the crankshaft:

Put ring halves 276 025 for bearing 6206 around the ball bearing, put outer ring over ring halves. Fix puller by 2 Allen screws M8x40 to the ring halves. Pull off ball bearing by turning the puller screw to the right (see ill. 9).

Repeat procedure for ball bearing 6306 with ring halves 977 475.

Check every single part. All parts have to be cleaned and checked for condition, wear, damage and fissures.

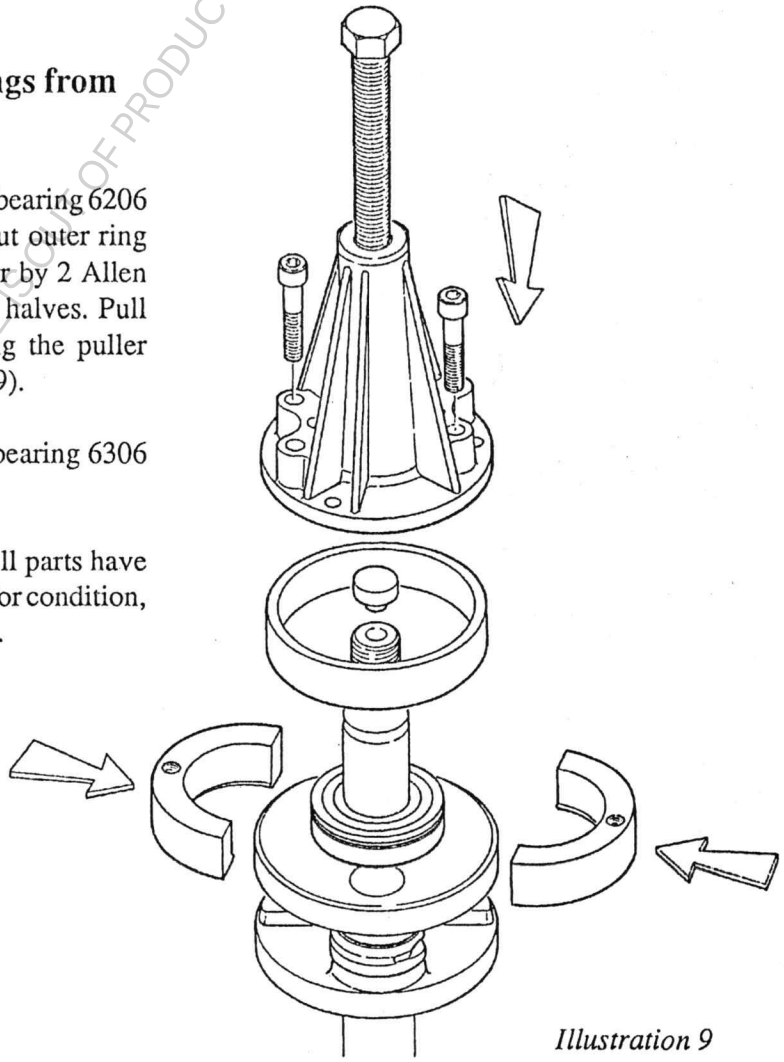

Illustration 9

2.7) Checking the crankshaft:

Check the following points on the crankshaft:

- ☞ Crankshaft placed on V-blocks on the bearing seats, check for eccentricity. Eccentricity on cone, p.t.o. side, must not exceed 0,03 mm (.0012 in.), and on cone, magneto side, max. 0,06 mm (.00236 in.). Measuring points shown on illustration.
- ☞ radial play in con rod bearing max. 0,06 mm (.00236 in.)
- ☞ con rod axial play max. 1 mm (.04 in.)
- ☞ groove for Woodruff key
- ☞ taper surfaces
- ☞ bearing seats and surfaces for oil seals
- ☞ threads on the 2 crankshaft ends

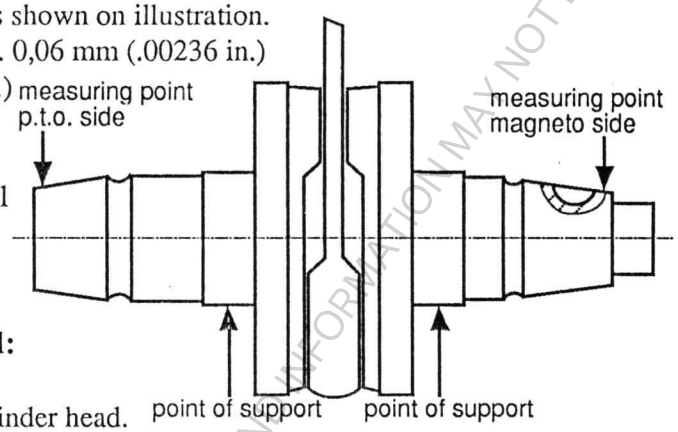

Illustration 10

2.8) Checking the cylinder head:

a) Check combustion chamber of cylinder head. Clean carefully from combustion residues.
b) Check spark plug threads in cylinder head.

2.9) Checking the cylinder:

a) Visual check of cylinder bore working surface for damage (cracks, scrapes, seizing marks)

b) Measuring the cylinder bore diameter:
Measure 15 mm below upper cylinder edge and right above the exhaust port, in both directions.

Bore dimensions of new cylinder:		72,00 ÷ 72,01^{Ø} mm for tolerance group „red“
		72,01 ÷ 72,02^{Ø} mm for tolerance group „green“
	1st oversize =	72,25 ÷ 72,26 mm for tolerance group „red“
		72,26 ÷ 72,27 mm for tolerance group „green“
Wear limit:	standard =	72,20 mm
	1st oversize =	72,45 mm

2.10) Checking the piston:

a) Piston crown: Remove combustion residues carefully.

b) Dimensions of piston diameter:
71,93 - 71,94 mm measured 27 mm from bottom, 90° to piston pin axis.
Wear limit: standard = 71,76 mm - 1st oversize = 72,01 mm

c) Checking wear of piston rings:
Piston ring end gap (if ring is inserted in new cylinder or in a calibration ring)
New piston ring: 0,20 ÷ 0,35 mm (.008 ÷ .014 in.). Wear limit: 1 mm (.04 in.)

d) Checking wear of piston ring groove:
groove for rectangular ring (vertical play of rectangular ring)
New piston: 0,04 ÷ 0,11 mm (.00157 ÷ .0043 in.). Wear limit: 0,20 mm (.0079 in.)
Trapez ring: Cannot be measured, exchange together with rectangular ring.

2.11) Checking of crankcase:

Check bearing seats, crankcase rings and sealing surfaces. The crankshaft bearings have press fit in the crankcase. The bearing seats must not show any wear. Check condition of main bearings and oil seals.

The following parts must absolutely be renewed at general overhaul:
All gaskets, oil seals, crankshaft main bearings, con rod assy., piston pin bearing and spark plug.

3) Engine reassembly:

3.1) Mounting of ball bearings on crankshaft:

In order to avoid deformation of crankshaft when mounting the ball bearings a mounting support has to be used. This mounting support is placed between the crankblades (see Ill. 11).

3.1.1) Place radius shim 827 440 on crankshaft, p.t.o. side. Warm ball bearing 6306 to approx. 80°C (180°F) and push it on crankshaft (push firmly to assure proper seat of the bearing).

3.1.2) Place radius shim 827 440 and shim(s) 944 582 - 944 586, as required, on crankshaft, magneto side. Warm ball bearing 6206 to approx. 80°C (180°F) and push it on crankshaft (push firmly to assure proper seat of the bearing). For pressing procedure a manual toothed rack press is recommended.

ATTENTION: Never clamp crankshaft with the crankpin in a vice trying to knock the bearing onto it.

In that case the crankblades are pressed together (no more parallel) and the crankshaft is unusable resp. has to be aligned again.

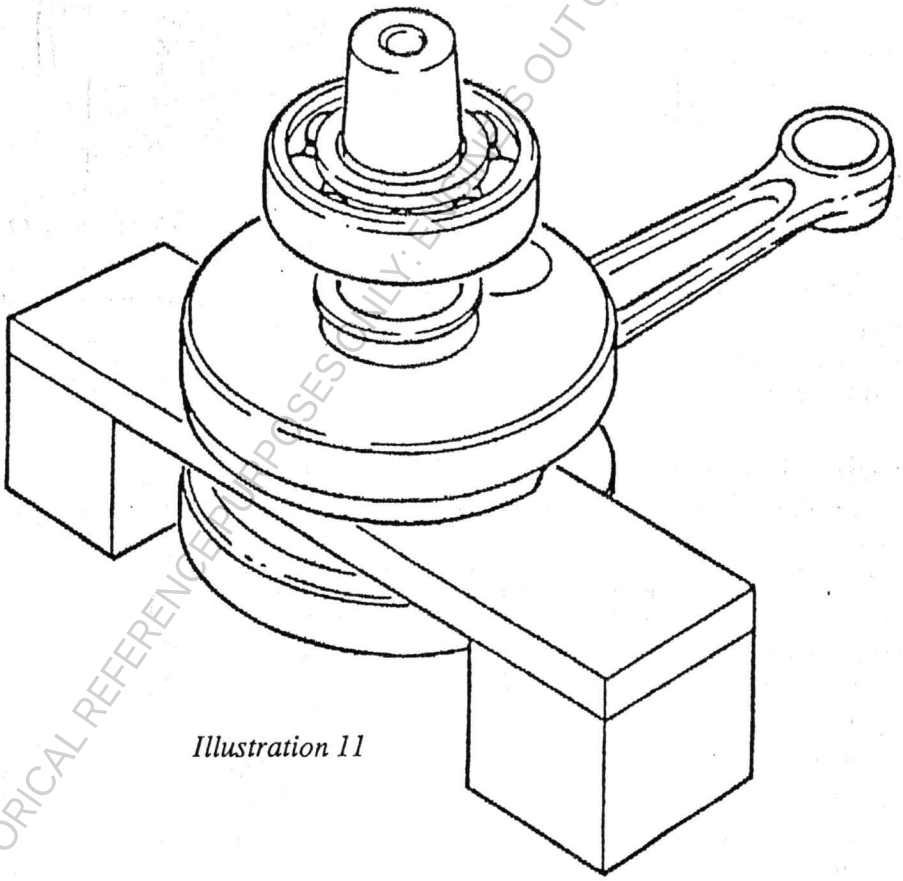

Illustration 11

3.2) Measuring and adjusting of axial bearing play:

The crankshaft installed must have an axial bearing play of 0,2 ÷ 0,4 mm (.0079 ÷ .016 in.). To measure this, the crankshaft and the two crankcase halves have to be measured with a slide gauge resp. depth gauge (see ill. 12 and 13).

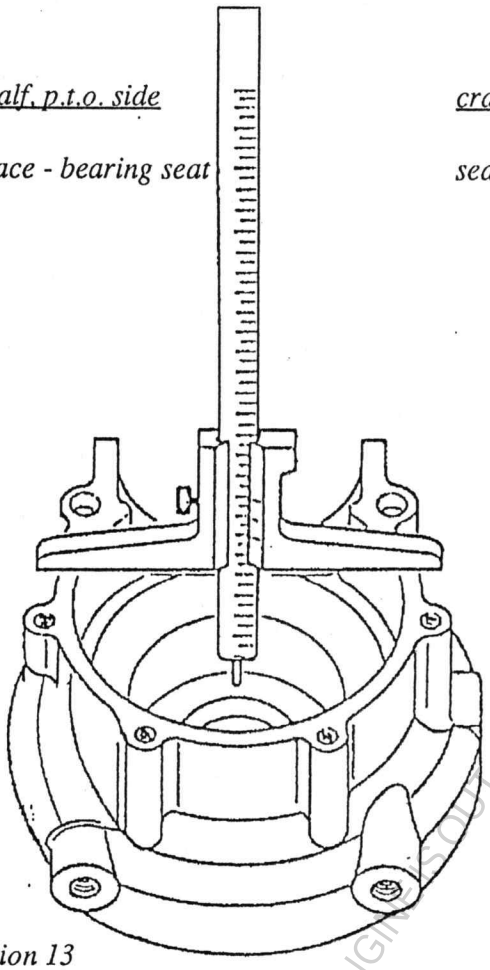

Illustration 13

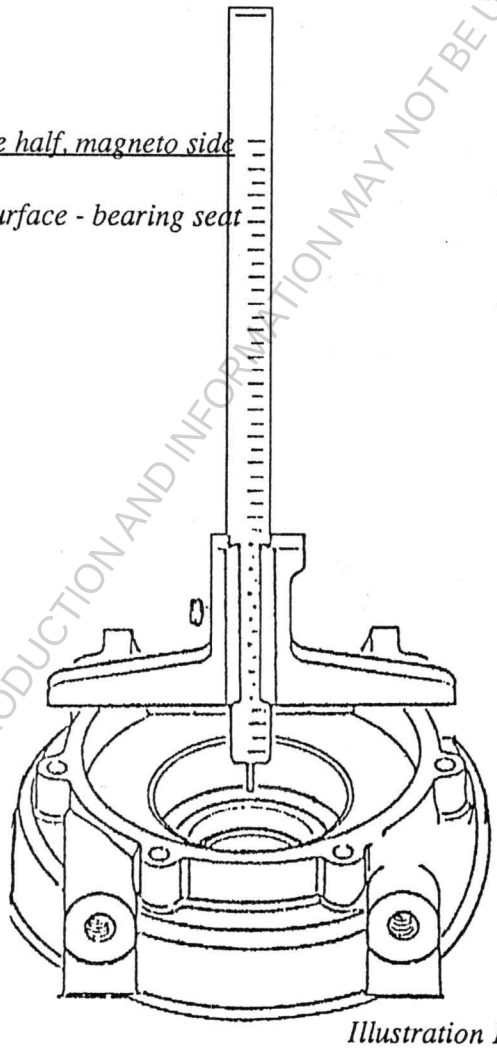

Illustration 12

The 2 dimensions have to be added. This dimension must be balanced by shims on crankshaft, magneto side (see ill. 14).

By adding the crankcase gasket at assembly of crankcase halves, the thickness of the gasket gives the required axial play of crankshaft between the main bearings.

ATTENTION: The two main bearings have to be mounted so that the cage back shows towards the oil seals.

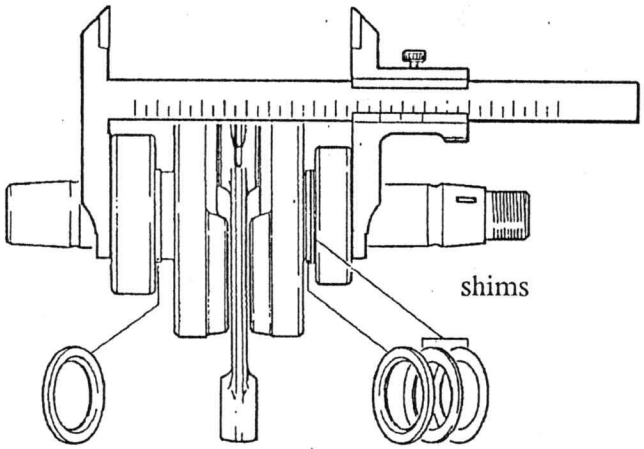

Illustration 14

3.3) Mounting of cylinder/piston components:

3.3.1) Mounting of crankshaft:

Warm crankcase up to approx. 80°C (180°F). Press oil seal 230 425 with mounting jig fully into its seat in crankcase. Press in crankcase ring 960 765 with mounting jig.

Fill groove between oil seal lips with high temperature bearing grease and mount crankshaft. Place crankcase gasket.

Mount oil seal 850 050 and crankcase ring 827 820 in crankcase, p.t.o. side. Push crankcase half onto crankshaft.

TOOL: Mallet (plastic hammer)
Tighten crankcase screws to 22 Nm (195 in.lb.), crosswise.

TOOL: Torque wrench, socket wrench insert 13 mm

3.3.2) Mounting of piston:

Cover crankcase with clean cloth and insert piston pin needle cage in bore of connecting rod. Warm piston to 40 ÷ 50°C (105 ° ÷ 120° F).

Insert guide pin for piston pin through the piston hole and connecting rod bore (take care not to damage the needle bearing!).

Coat piston pin with oil, place it on guide pin and insert it into piston pin hubs. All punch impact must be absorbed by your hand to avoid bending of the rod (arrow on piston crown must show towards exhaust). Secure piston pin with circlips.

TOOL: Circlip installation tool assy., pos. 32 and 33, chapt. 1.1)

ATTENTION: The circlips must engage in the grooves of the piston. Always use new circlips! Fit the circlips with their opening towards bottom (i.e. opposite to the piston crown).

3.3.3) Fitting of cylinder and cylinder head:

Fit cylinder base gasket.

ATTENTION: This gasket is not symmetrical. Place it in the correct position. Take care of the transfer recesses in the crankcase!

Lubricate piston and bring piston pins in correct position (securing pin between ends of piston ring). Press piston rings into the grooves and mount lubricated cylinder over the piston. Fit cylinder head gasket and cylinder head. Tighten hex. nuts M8 at 18 - 20 Nm (150 - 175 in.lb.) crosswise.

TOOL: Torque wrench with socket insert 13 mm a/f.

3.4) Ignition unit:

ROTAX engine 275 is fitted with a magneto generator 12V 75/23W (with contact breakers) supplying the necessary current for ignition. The ignition unit has been carefully adjusted by the manufacturer. Don't make adjustments unless absolutely necessary.

3.4.1) In case of troubles observe the following:

If the ignition fails intermittently or if there are other troubles that are due neither to spark plug nor carburetor, the contact breakers may be the cause. Contacts must be clean and not be burnt. Re-adjustment of contacts is only necessary after a longer operating time. They can be adjusted after having removed the rewind starter and the starting pulley. The magneto flywheel resp. the magneto housing need not be removed.

To check whether the ignition timing is correct, use a test lamp or a buzzer, connected between shorting cable of the ignition unit and mass. There is a mark on crankcase and magneto housing.

At the moment of ignition when the contact breakers just start to open the timing light of the test lamp fluctuates or the tone signal of the buzzer varies. At this moment the marks must correspond.

3.4.2) Fitting of armature plate:

Pull through cable harness, fix armature plate with Allen screws.

TOOL: Allen key 4 (mark on armature plate must correspond with mark on crankcase!).

3.4.3) Fitting of magneto flywheel:

Fit Woodruff key on crankshaft taper and screw magneto housing holder onto magneto housing.

Clean and degrease crankshaft taper. Apply LOCTITE 221 violet, 899 785, onto crankshaft taper and fit magneto housing on crankshaft.

ATTENTION: Before fitting magneto housing on the crankshaft take care that ignition unit and magnetos are clean and free of metal particles.

Secure threads of hex. nut M18 x 1,5 with LOCTITE 221 violet, 899 785, and tighten nut to 80 Nm. Remove magneto housing holder.

TOOL: Socket wrench insert 27 mm a/f and torque wrench

3.4.4) Ignition timing adjustment:

a) The ignition timing is 19° = 2,28 ±0,25 mm (.09 ±.01 in.) before T.D.C.

b) Fit the armature plate in a central position of the long holes or fit it according to the mark, if there is any, and tighten.

c) Adjust contact breakers so that they open at the moment of ignition.

d) Check maximum breaker gap (to be 0,3 ÷ 0,4 mm = .012 ÷ .016 in.). If the breaker gap is beyond this tolerance, turn the armature plate and repeat contact breaker adjustment as per paragraph c).

e) Breaker gap too small: Turn armature plate in engine rotation sense. Breaker gap too large: Turn armature plate contrary to engine rotation sense.

f) Checking of break-away gap: At the moment of ignition the break-away gap must be within 13 - 17 mm.

3.4.5) Break-away gap:

When correct timing is achieved, check pol shoe break-away gap. The gap must be within 13 - 17 mm = .512 ÷ .67 in. (see ill.) when the mark on the flywheel corresponds with the mark on the adaptor.

If the break-away gap is out of tolerance, the flywheel may have turned on the crankshaft. Remove flywheel and inspect taper and woodruff key. Repair if necessary. If the pole shoe break-away gap is not correct, the engine is hard to start or does not start at all or has misfiring.

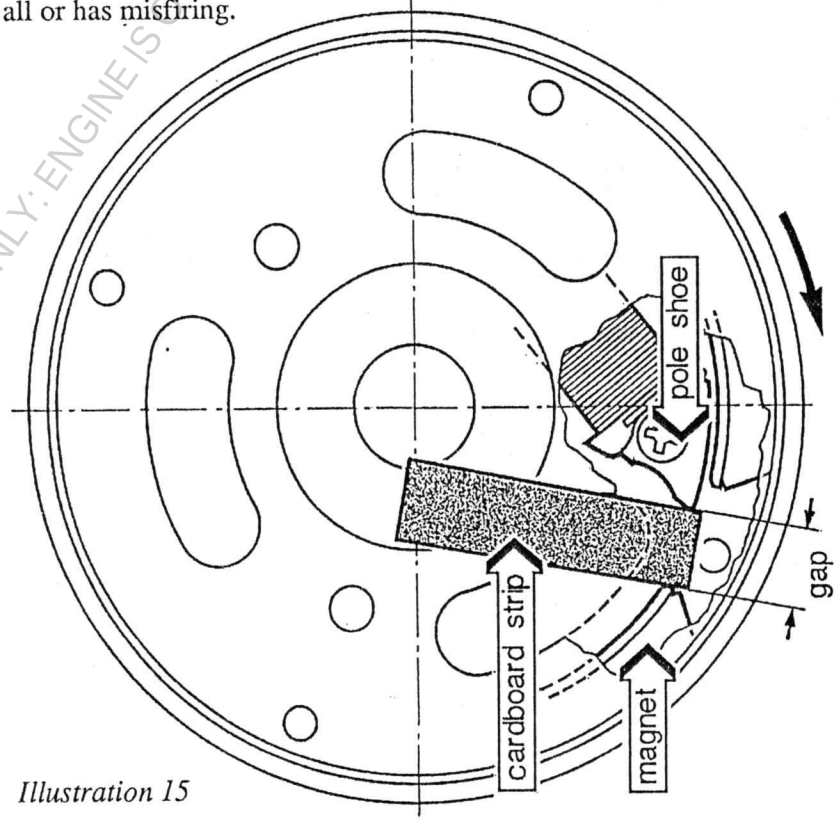

Illustration 15

3.4.6) Ignition damping box:

To avoid piston damages (holes) due to glowing residues on spark plug (created by certain fuel additives) it is necessary to

a) clean the spark plug every 10 operating hours and replace if necessary,

b) be sure that the ignition damping box 866 572 is fitted on engine which reduces the ignition energy to avoid glowing of residues on spark plug and piston crown,

c) check connection of damping box 866 572 as per wiring diagram (see para. 3.4.9).

d) Check damping box as follows:

— Function test: If the cables are connected inversed, there must be no spark on the spark plug when the engine is cranked through. If there is till a spark, the damping box is defective.

— In case of ignition troubles (no spark): Disconnect damping box, if there is now a spark, the reason may be:

— ignition damping box defective or connected with reversed polarity (see para. 3.4.9),

— pole shoe break-away gap is out of tolerance (Woodruff key on crankshaft broken or wrong armature plate adjustment, see para. 3.4.5, bad mass or bad ignition cable connection).

3.4.7) Checking values for ignition unit:

Generator coil:	3,0	÷	3,7 Ohm
Lighting coil 75W:	0,48	±	0,1 Ohm
Lighting coil 23W:	2,1	±	0,25 Ohm
Ignition coil, high voltage:	7,6	÷	11,4 kOhm
Ignition coil, primary winding:	1,805	÷	1,995 Ohm
Condensor:	0,24	÷	0,3micro farad

3.4.8) Lighting circuit:

The magneto generator produces, apart from the electric current required for the ignition, 12V 75+23W alternating current, which can be directly used for feeding lights and/or other users that can be operated with alternating current. To avoid the voltage rising above permissible levels, either a 75+23W-consumer must be connected or a voltage regulator must be used. To operate consumers requiring direct current (e.g. charging battery) a rectifier-regulator is required.

A 2-phase rectifier-regulator 866 080 is available. For feeding lights only, this rectifier-regulator can also be used without battery. In this case the regulated RMS-voltage will remain between 11 and 12 Volts as long as a minimum load of 1 Amp. is provided.

In case a battery is installed it has to be capable to absorb approx. 1 Amp. minimum continuous charging load, even with full battery (suggested minimum battery capacity: 9 Amp.h). Regulated voltage is 13,5 to 14,5 Volts. If no minimum load can be assured, use a 3-phase rectifier-regulator 264 870.

3.4.9) Wiring diagram:

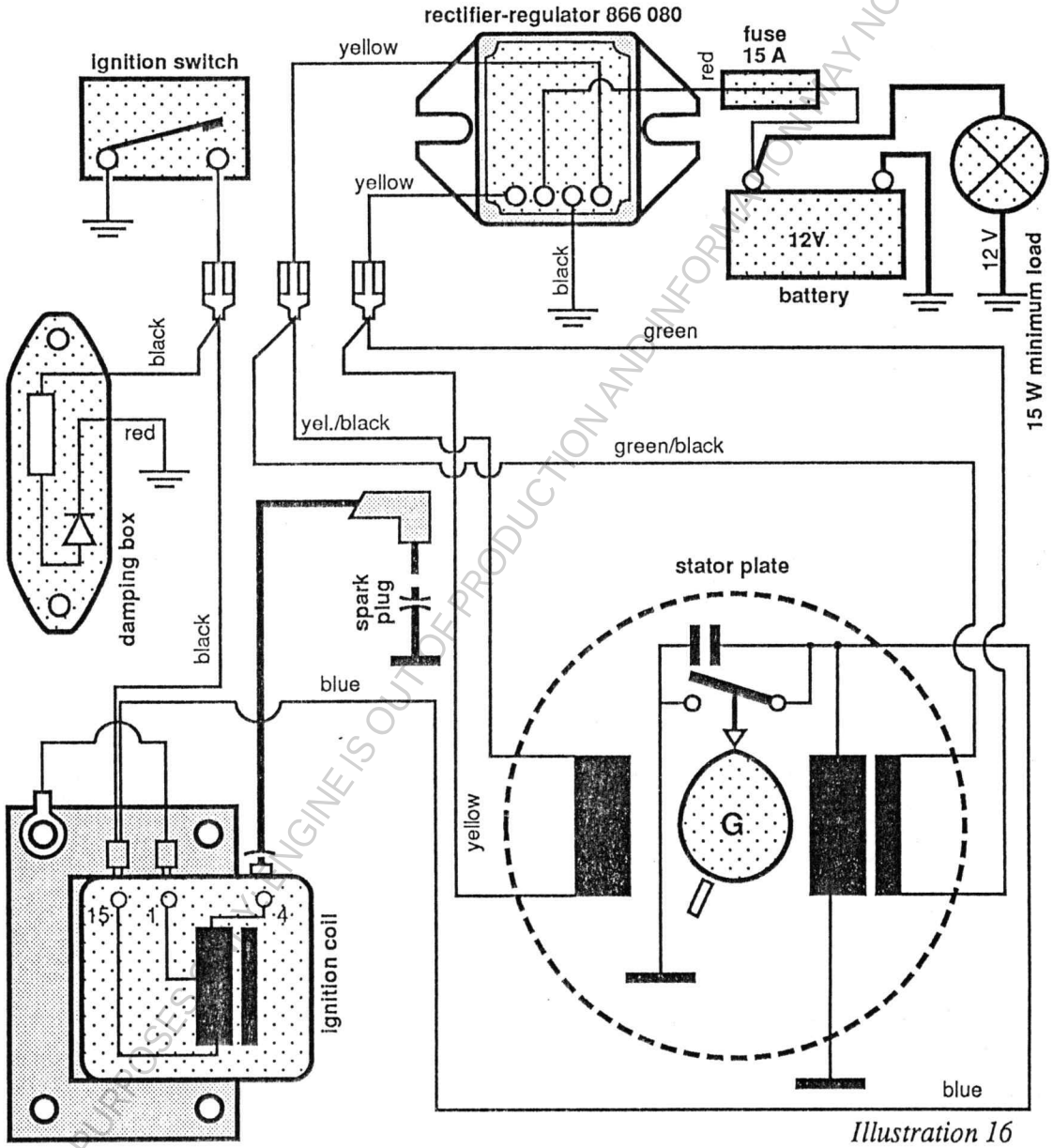

Illustration 16

3.5) Intake manifold:

Mount intake manifold with gasket. TOOL: socket wrench 13 mm a/f.

3.6) Exhaust socket:

Fix exhaust socket with gasket and mount exhaust muffler.
TOOL: Allen key 6

4) Rewind starter:

4.1) Starting procedure

Pull starter grip until resistance can be felt, then pull vigorously, but not fully to the end of starter rope. The rope should not be pulled out in an excessive angle at starting procedure. The rewind spring pulls the starter rope back into its original position in the cartridge. Don't let the starter grip fly back! The engine must not be operated if the rewind starter is defective.

4.2) Removal of rewind starter

The rewind starter can be detached by removing 4 screws. Underneath there is the starting pulley. This can be used as an emergency starting device by winding the starter rope around the pulle

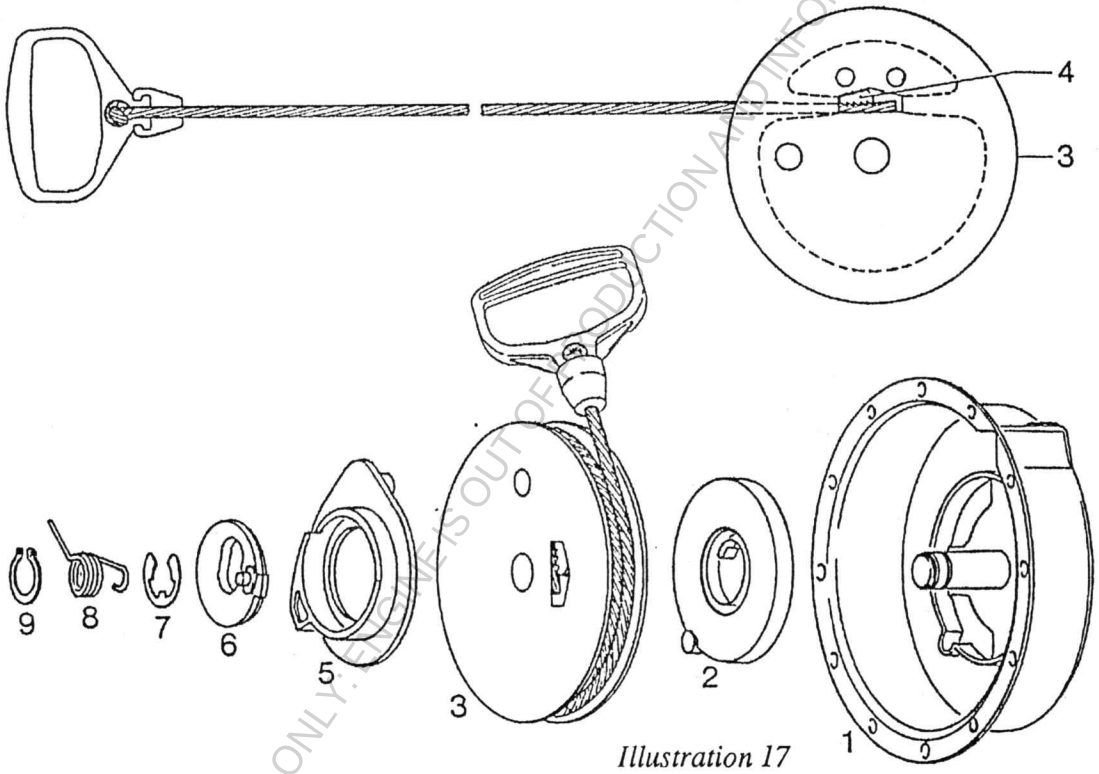

Illustration 17

4.3) Changing the starter rope:

First remove snap ring ❾, loop spring ❽, circlip ❼, pawl lock ❻ and the pawl ❺. The numbers indicated refer to the illustration above.

TOOLS: Circlip pliers
screwdriver

Pull the starter rope out to the end, hold starter housing ❶ and rope sheave ❸ together in their position. There is an opening in the rope sheave. The key clamp ❹ visible in the opening has to be pushed out in the opposite sense of pulling direction. Withdraw the rope from rope sheave.

Then insert the new starter rope into the rope sheave, fit the key clamp in the same position as it was before. Remount the parts ❺, ❻, ❼, ❽ and ❾ (see „re-assembly of rewind starter").

4.4) Disassembly of rewind starter:

Remove the starter rope as described before. Then let the rewind spring relax slowly. Now lift the rope sheave ❸ and the spring cartridge ❷.

CAUTION: When lifting the spring cartridge, the rewind spring may jump out resulting in injury!

4.5) Re-assembly of rewind starter:

Place the spring cartridge with greased rewind spring in the starter housing. Take care that the spring winds when starting. When mounting the rope sheave, the inner bent end of the spring must engage in the slot of the rope sheave.

Wind the rope sheave to tension the spring completely. Then let the rope sheave return until the starter rope can be inserted through the starter housing into the rope sheave. Fix starter rope with key clamp ❹. The teeth of the key clamp must show towards center of rope sheave (contrary to pulling direction). The bolt of the pawl lock should be approx. opposite to the pawl nose. If this is not the case, the loop spring cannot be mounted correctly and the function of the rewind starter is not guaranteed.

Mount the circlip ❼ with the sharp edge side showing upside.

TOOL: Screwdriver

The loop spring ❽ has to be greased at its inside with MOLYKOTE GN before mounting, then fit the snap ring ❾.

ATTENTION: For lubrication of rewind starter components use cold-resisting oil (e.g. MOBILARMA 524).

4.6) Fitting of rewind starter:

Fit starting pulley, adapter and rewind starter with 4 Allen screws M6 x 70. Check engagement of rewind starter.

TOOL: Allen key ❻

5) Carburetor:

5.1) General:

The diaphragm carburetor works independent of its inclination, and its simple conception has proved its efficiency.

The carburetor must be fed by a fuel pump. Before entry of fuel into the carburetor a filter must be installed to avoid obstruction of needle valve and jet bores. Check whether the fuel pump supplies sufficient fuel (20 litres per hour). The entry of fuel into the carburetor is regulated by a diaphragm controlled needle valve (NV).

The rating of fuel quantity is controlled via a pre-set adjustable main jet (the jet is installed besides the cast „H“ on carburetor) and influences especially the full load operation. The adjustable main jet is set and secured by the factory. Basic adjustment: 1/2 - 7/8 turn open.

The adjustable idle jet (bar screw besides the cast „L“ on carburetor) influences the idle run and at an essentiel extent also the part load operation.

The idle r.p.m. is adjusted by the idle speed adjustment screw acting on the throttle valve lever (see Operator's Manual, page 11, para. 8.7). There is a choke flap installed as starting aid. When starting the cold engine, the flap must be completely closed, during operation of engine it must be fully open. The required operational r.p.m. are regulated via throttle valve.

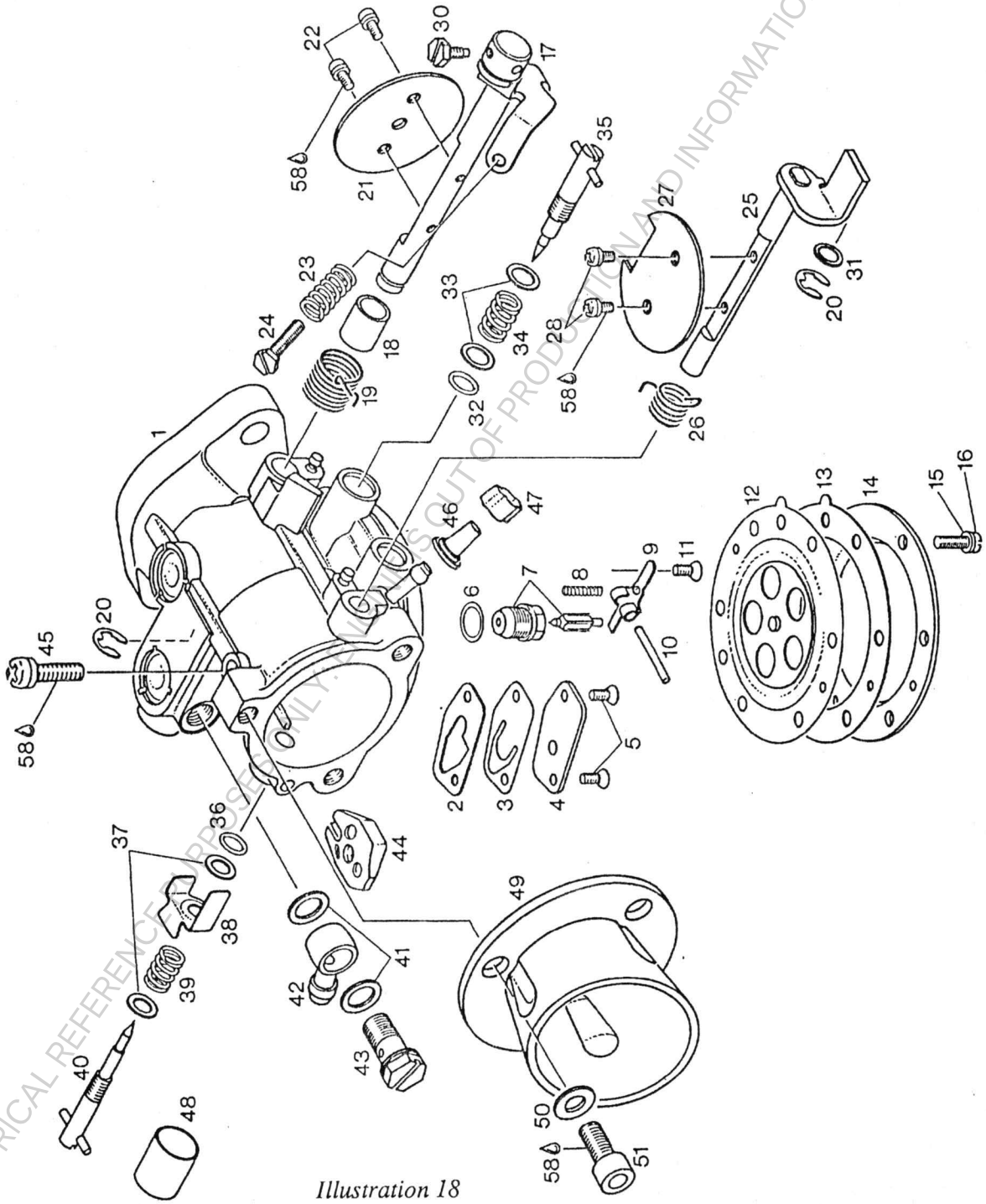

Illustration 18

5.2) Carburetor adjustment:

5.2.1) Idle r.p.m.:

See Operator's Manual, page 11, para. 8.7

Adjustment of variable idle jet „L":

Recommended adjustment: Turn out jet (by bar screw) 7/8 - 1 1/8 turn. At lean engine run at partial load turn slightly further out (1/8 turn), at too rich engine operation at partial load screw the jet in (approx. 1/8 turn to the right).

5.2.2) Main jet:

No adjustment is allowed to be made on main jet without approval by the engine manufacturer or the competent aviation authorities.

5.3) Cleaning of carburetor from dirt particles in fuel:

5.3.1) Disassembly:

Remove cover, pos. 14, regulating diaphragm and gasket, pos. 12 and 13, remove screw, pos. 11. After removal of regulating lever, pos. 9, the needle valve can be taken out. After removal of valve diaphragm plate, pos. 4, and idle jet, pos. 35, the carburetor can be cleaned with fuel and compressed air. Check valve diaphragm, pos. 3, and gasket, pos. 2.

5.3.2) Re-assembly:

Proceed very carefully as the carburetor components are very delicate. Keep all parts clean as dirt particles may clog the bores or cause leaks on valves. Needle valve and regulating lever must move easily.

5.3.3) Checking the assembled carburetor for tightness:

Pump carburetor carefully via the fuel inlet nipple. The needle valve must keep pressure up to 0,5 ÷ 0,7 bar (7 ÷ 10 psi) and then releases pressure instantly. Particular care has to be paid on carburetor fitting that no dirt gets into the ducts when fitting the tubes.

5.4) Carburetor trouble chart:

PROBLEM	POSSIBLE DEFECT	REMEDY
Carburetor too „rich" (carburetor supplies too much fuel)	dirt in needle valve	clean
	needle valve sticks	see para. 5.3.2)
	cone of needle valve used	replace
	spring for regulator lever jumped out	replace spring
	regulating diaphragm defective or fitted wrong	fit correctly or replace
	choke throttle closes by itself	repair choke valve actuation
	overpressure in fuel tank	check tank venting
	regulating lever bent	repair or replace
Carburetor too „rich" at operation at high altitudes (air field higher than 1500 m sea level)		use smaller main jet adjustment, observing para. 5.2.2)
Engine does not accelerate (does not respond to gaz)	idle mixture too lean	screw idle jet out (idle regulating screw up to one turn)
	carburetor is fitted loose on intake manifold, gasket between carburetor and intake manifold leaking, engine takes in wrong air	tighten carburetor connection and fixation
	cover plate loose	tighten cover plate
	gasket damaged	replace gasket
	fuel ducts and fuel tubes blocked, jets and needle valve dirty	clean carburetor and tubes
	valve lever bent	repair or replace
	not enough fuel	refill fuel tank

Engine has bad or no idle functioning	wrong carburetor adjustment	adjust carburetor
	carburetor bores dirty	clean carburetor
	valve lever bent	adjust or replace
	needle valve or valve lever blocked	clean or replace
	throttle valve does not close and causes too high idle r.p.m.	adjust throttle valve and its actuation
	cover plate not tight	tighten or replace
	venting bore in cover plate blocked	clean cover plate
	tank venting not functioning	clean or repair
Engine operation too „lean“	fuel line (inlet) blocked	clean
	fuel line between tank and pump not tight	tighten or replace tubes
	fuel pump does not supply enough	check free passage
	fuel bores in carburetor blocked	clean
	filter blocked	replace filter
	idle regulating screw not well adjusted	check adjustment
	valve lever bent	repair or replace
	not enough fuel in tank	refill fuel

6) Reduction gearbox:

6.1) Dismantling of reduction gearbox:

Place gearbox under a hand press (see ill. 19) and apply pressure via mounting yoke (part no. 876 880) on the dog gear, of max. 16 000 N until the ring halves come free and can be taken off.

CAUTION: Pressure must not exceed 16000 N (3600 lbs), otherwise the dog gear gets damaged (bent).

Remove angular ring, 2 thrust washers, dog gear, dog hub, disk springs and distance shim from the shaft. Remove propeller shaft.

Clean all parts and check for wear, replace if necessary. Take particular care of groove „B" where the ring halves are fitted. Check ball bearing (pos. 18 in spare parts list) for perfect condition and the bearing seats in gear housing.

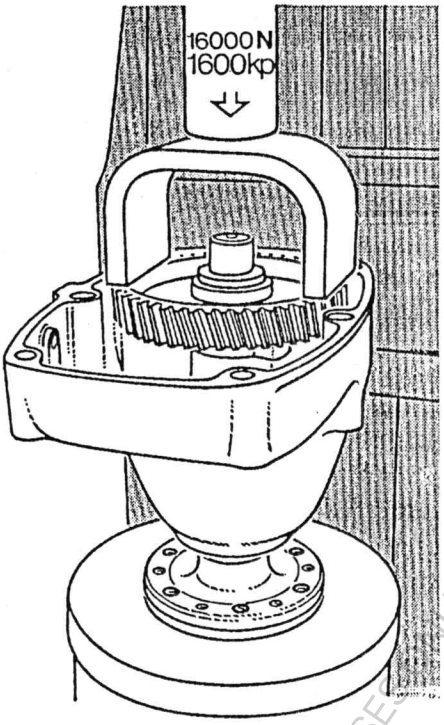

Illustration 19

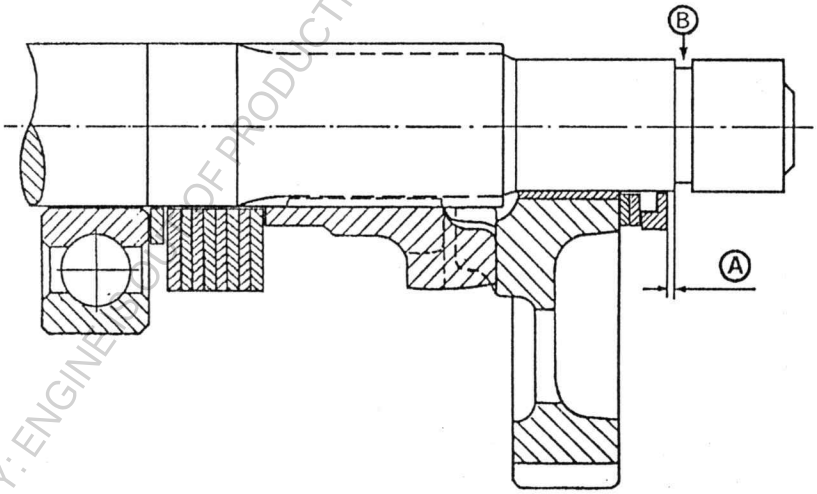

Illustration 20

6.2) Reassembly of reduction gearbox:

If ball bearing (pos. 18), needle bearing (pos. 10) and oil seal (pos. 15) have to be replaced, heat the gearbox cover to 70 - 80°C (160°÷ 175°F). Fit retaining ring (pos. 19), press in oil seal (pos. 15) from o(530 in.lb.)utside until level. Press in ball bearing down to the retaining ring. Press needle bearing in until flush. Fit radius shim (pos. 17) onto propeller shaft, apply „Copa Slip" to the bearing seat and tooth profile of the propeller shaft, insert propeller shaft from outside through the gear cover into the ball bearing. Fit thrust washer (pos. 20) 944 478.

Grease 8 disk springs, fit them in pairs opposite to each other as shown in spare parts list, on propeller shaft, then the dog hub and dog gear (apply „Copa Slip" to the bores and dogs).

Place gearbox under hand press (see ill. 19) with mounting yoke 876 880 over dog gear. Place angular ring (pos. 42) upside down (with the „L“ shape showing downwards) onto propeller shaft (see ill. 20) to facilitate reading of the distance „A“. Position numbers refer to spare parts list!

Apply pressure of max. 16 000 N (3 600 lbs) via the yoke so that springs will be completely compressed (to a block). The angular ring top edge and the groove „B“ bottom edge must be level. If not, compensate with 1 mm (.04 in.) shim, 944 468, or 1,2 mm (.047 in.) shim, 944 455.

ATTENTION: Use only original shims because they must be hardened ones!

After compensation with shim, place the angular ring again in its original position („L“ shape showing towards outside). Insert ring halves and release pressure from gearbox.

6.2.1) Measuring of propeller shaft axial play:

The propeller shaft installed must have an axial play of 0,1 - 0,4 mm (.004 ÷ .016. For measuring you will need a depth gauge with 2 support blocks machined of equal height (e.g. 20 mm = .79 in.).

6.2.2) Measuring procedure:

Place support blocks onto flange surface of gearbox cover and measure depth to the ring halves resp. angular ring with a depth gauge.

Place support blocks on flange surface on gearbox housing and measure depth down to the bearing outer race with a depth gauge. Add shims until the dimension difference is balanced (= zero). By adding the gearbox housing gasket, the thickness of the gasket gives the necessary axial play for the propeller shaft.

Fit gearbox housing and tighten screws. Check easy movement of propeller shaft.

6.3) Fitting of drive gear:

Degrease taper of crankshaft and of drive gear, put LOCTITE 221 into crankshaft internal threads. Fix crankshaft by magneto housing holder with extension, tighten with special socket wrench insert 3/8", 877 215. Tightening torque 60 Nm (530 in.lb.).

ATTENTION: Check radial out of round of drive gear which must not exceed 0,05 mm (.002 in.).

Fit gearbox to engine. Check engine with gearbox for easy movement by turning propeller flange by hand. Fitting of propeller flange and propeller and filling the gearbox with oil is done with engine installed in airplane.

7) Important hints:

- For this aircraft engine respect the prescriptions of the National Air Authorities!

- Repairs and overhaul must be done only by trained and authorized persons.

- Only original spare parts must be used.

- The instructions of the engine manual and indications in spare parts list must be respected.

8) Tightening torques:

hex. screw	M8	crankcase	22 Nm (195 in.lb.)
hex. screw	M8	cylinder head	20 Nm (175 in.lb.)
hex. screw	M8	intake manifold	20 Nm (175 in.lb.)
hex. nut	M8	gearbox	22 Nm (195 in.lb.)
hex. nut	M18x1,5	magneto housing	80 Nm (710 in.lb.)
Allen screw	1/2"	drive gear	60 Nm (530 in.lb.)
Allen screw	M5	armature plate	6 Nm (55 in.lb.)
Taptite screw	M5	wiring harness	3 Nm25 in.lb.)
Allen screw	M8	exhaust socket	25 Nm (220 in.lb.)

9) Technical data:

BORE:	72 mm (2,834 in.)
STROKE:	66 mm (2,6 in.)
DISPLACEMENT:	268,7 cc. (16,4 cu.in.)
COMPRESSION RATIO:	11,8
IGNITION UNIT:	Magneto generator SCP 1
CONTACT BREAKER GAP:	0,35 - 0,45 mm (.014 ÷ .018 in.)
IGNITION TIMING:	2,28 mm (.09 in.) ± 0,25 (.01 in.), 19 °BTDC
SPARK PLUG:	14 mm, B8ES, BOSCH W3CC, W3CP
ELECTRODE GAP:	0,4 - 0,6 mm (.016 ÷ .024 in.)
CARBURETOR:	Diaphragm carburetor BN 38
ROTATION SENSE OF PROPELLER SHAFT:	clockwise, when looking at propeller flange
STARTER:	Manual rewind starter
FUEL:	2-stroke-mixture, PREMIUM fuel not below RON 95, or AVGAS 100 LL (but only if PREMIUM gas is not available)
LUBRICATION:	By oil in fuel mixture, mixing ratio 1:50 with Super 2-stroke oil, specification TSC 3
GEARBOX LUBRICATION:	synthetic gear oil, SAE 140, API GL 5, approx. 300 cc. (18,3 cu.in.)
WEIGHT:	With exhaust system, gearbox and rewind starter.....25 kg (55 lb.)
PROPELLER OUT-OF-BALANCE:	max. 2,5 gm admissible
MASS MOMENT OF INERTIA:	max. 3000 kg cm² admissible