ROTAX®

ILLUSTRATED PARTS CATALOG

FOR ROTAX ENGINE TYPE 915 i A SERIES REF NO.: IM-915 i A | PART NO.: 898891

A BRP BRAND

⚠ WARNING

These technical data and the information embodied therein are the property of BRP-Rotax GmbH & CO KG, Austria, acc, BGBI 1984 no. 448, and shall not, without prior written permission of BRP-Rotax GmbH & Co KG, be disclosed in whole or in part to third parties. This legend shall be included on any reproduction of these data, in whole or in part. The Manual must remain with the engine/aircraft in case of sale.

ROTAX® is a trade mark of BRP-Rotax GmbH & Co KG. In the following document the short form of BRP-Rotax GmbH & Co KG = BRP-Rotax is used.
Other product names in this documentation are used purely for ease of identification and may be trademarks of the respective company or owner.

Copyright 2020 © - all rights reserved.

Translation into other languages might be performed in the course of language localization but does not lie within ROTAX® scope of responsibility.
In any case the original text in English language and the metric units are authoritative.

Table of Content

Chapter	**LEP** – LIST OF EFFECTIVE PAGES
Chapter	**TOA** – TABLE OF AMENDMENTS
Chapter	**00–00–00** – INTRO
Chapter	**24–20–00** – IGNITION HOUSING, STATOR, RECTIFIER REGULATOR, CRANKSHAFT POSITION SENSOR ASSY.
Chapter	**24–30–00** – EXTERNAL GENERATOR F3A (ALL PARTS OPTIONAL)
Chapter	**61–20–00** – ARRANGEMENT FOR CONSTANT SPEED AND FIXED PITCH PROPELLER
Chapter	**71–20–00** – ENGINE SUSPENSION FRAME
Chapter	**72–10–00** – PROPELLER GEAR ASSY., OVERLOAD CLUTCH
Chapter	**72–20–00** – CRANKCASE, CRANKSHAFT, PISTON, CYLINDER, SPRAG CLUTCH, CAMSHAFT, VALVE TRAIN, CYLINDER HEAD, VALVE COVER
Chapter	**73–10–00** – INTAKE MANIFOLD, AIRBOX, THROTTLE BODY SOCKET, INTERCOOLER, WASTEGATE, FUEL INJECTOR, FUEL RAIL, PRESSURE REGULATOR, FUEL RAIL COVER, FUEL PUMP ASSY.
Chapter	**74–20–00** – IGNITION COILS, IGNITION CABLE, SPARK PLUG CONNECTOR, SPARK PLUG
Chapter	**75–20–00** – WATER PUMP WITH DRIVE, EXPANSION TANK, COOLING AIR BAFFLE
Chapter	**76–10–00** – ENGINE CONTROL UNIT, FUSE BOX REGULATOR
Chapter	**76–50–00** – WIRING HARNESS
Chapter	**78–10–00** – EXHAUST SYSTEM, EXHAUST TEMPERATURE SENSOR
Chapter	**79–20–00** – OIL TANK, OIL PUMP ASSY., OIL FILTER, OIL TEMPERATURE SENSOR, OIL PRESSURE SENSOR, OIL SPRAY NOZZLE ASSY.
Chapter	**80–10–00** – ELECTRIC STARTER, STARTER RELAY

INTENTIONALLY LEFT
BLANK

Chapter: LEP
LIST OF EFFECTIVE PAGES

Each new revision to the Illustrated Parts Catalog will have a new List of Effective Pages.

Chapter	Page	Date
	Title page	
LEP	1	February 01 2020
	2	February 01 2020
	3	February 01 2020
	4	February 01 2020
TOA	1	February 01 2020
	2	February 01 2020
	3	February 01 2020
	4	February 01 2020
00-00-00	1	February 01 2020
	2	February 01 2020
	3	February 01 2020
	4	February 01 2020
	5	February 01 2020
	6	February 01 2020
	7	February 01 2020
	8	February 01 2020
	9	February 01 2020
	10	February 01 2020
	11	February 01 2020
	12	February 01 2020
	13	February 01 2020
	14	February 01 2020
	15	February 01 2020
	16	February 01 2020
	17	February 01 2020

Chapter	Page	Date
	18	February 01 2020
	19	February 01 2020
	20	February 01 2020
	21	February 01 2020
	22	February 01 2020
24-20-00	1	February 01 2020
	2	February 01 2020
	3	February 01 2020
	4	February 01 2020
24-30-00	1	February 01 2020
	2	February 01 2020
	3	February 01 2020
	4	February 01 2020
61-20-00	1	February 01 2020
	2	February 01 2020
	3	February 01 2020
	4	February 01 2020
71-20-00	1	February 01 2020
	2	February 01 2020
	3	February 01 2020
	4	February 01 2020
72-10-00	1	February 01 2020
	2	February 01 2020
	3	February 01 2020
	4	February 01 2020
	5	February 01 2020

Chapter	Page	Date
	6	February 01 2020
	7	February 01 2020
	8	February 01 2020
72-20-00	1	February 01 2020
	2	February 01 2020
	3	February 01 2020
	4	February 01 2020
	5	February 01 2020
	6	February 01 2020
	7	February 01 2020
	8	February 01 2020
73-10-00	1	February 01 2020
	2	February 01 2020
	3	February 01 2020
	4	February 01 2020
	5	February 01 2020
	6	February 01 2020
	7	February 01 2020
	8	February 01 2020
	9	February 01 2020
	10	February 01 2020
	11	February 01 2020
	12	February 01 2020
	13	February 01 2020
	14	February 01 2020
74-20-00	1	February 01 2020
	2	February 01 2020
	3	February 01 2020
	4	February 01 2020
75-20-00	1	February 01 2020

Chapter	Page	Date
	2	February 01 2020
	3	February 01 2020
	4	February 01 2020
	5	February 01 2020
	6	February 01 2020
	7	February 01 2020
	8	February 01 2020
76-10-00	1	February 01 2020
	2	February 01 2020
	3	February 01 2020
	4	February 01 2020
	5	February 01 2020
	6	February 01 2020
76-50-00	1	February 01 2020
	2	February 01 2020
	3	February 01 2020
	4	February 01 2020
78-10-00	1	February 01 2020
	2	February 01 2020
	3	February 01 2020
	4	February 01 2020
	5	February 01 2020
	6	February 01 2020
	7	February 01 2020
	8	February 01 2020
79-20-00	1	February 01 2020
	2	February 01 2020
	3	February 01 2020
	4	February 01 2020
	5	February 01 2020

Chapter	Page	Date
	6	February 01 2020
	7	February 01 2020
	8	February 01 2020
	9	February 01 2020
	10	February 01 2020
	11	February 01 2020
	12	February 01 2020

Chapter	Page	Date
80-10-00	1	February 01 2020
	2	February 01 2020
	3	February 01 2020
	4	February 01 2020
	Index	
	Rear page	

INTENTIONALLY LEFT
BLANK

Chapter: TOA
TABLE OF AMENDMENTS

Approval*
The technical content of this document is approved under the authority of DOA ref. EASA.21.J.048.
This document is part of the ICA for product [2019].

Edition 0/Rev. 1	June 01 2019	Obsolete with Revision 2, which is a complete re-revision.
Rev. 2	Feb. 01 2020	

Rev. no.	Chapter	Page	Date of change	Remark for approval	Date of approval from authori-ties	Date of inclusion	Signature
0	LEP	all	December 01 2017	DOA*			
0	TOA	all	December 01 2017	DOA*			
0	00-00-00	all	December 01 2017	DOA*			
0	24-20-00	all	December 01 2017	DOA*			
0	24-30-00	all	December 01 2017	DOA*			
0	61-20-00	all	December 01 2017	DOA*			
0	71-20-00	all	December 01 2017	DOA*			
0	72-10-00	all	December 01 2017	DOA*			
0	72-20-00	all	December 01 2017	DOA*			
0	73-10-00	all	December 01 2017	DOA*			
0	74-20-00	all	December 01 2017	DOA*			
0	75-20-00	all	December 01 2017	DOA*			
0	76-10-00	all	December 01 2017	DOA*			
0	76-50-00	all	December 01 2017	DOA*			
0	78-10-00	all	December 01 2017	DOA*			
0	79-20-00	all	December 01 2017	DOA*			
0	80-10-00	all	December 01 2017	DOA*			

Rev no.	Chapter	Page	Date of change	Remark for approval	Date of approval from authori-ties	Date of inclusion	Signature
1	LEP	all	June 01 2019	DOA*			
1	TOA	all	June 01 2019	DOA*			
1	00-00-00	20	June 01 2019	DOA*			
1	24-20-00	2-4	June 01 2019	DOA*			
1	24-30-00	3	June 01 2019	DOA*			
1	61-20-00	2,4	June 01 2019	DOA*			
1	71-20-00	3	June 01 2019	DOA*			
1	72-10-00	2-7	June 01 2019	DOA*			
1	72-20-00	3,5-8	June 01 2019	DOA*			
1	73-10-00	2,3,5-9,11	June 01 2019	DOA*			
1	74-20-00	2-3	June 01 2019	DOA*			
1	75-20-00	3,5	June 01 2019	DOA*			
1	76-10-00	2-5	June 01 2019	DOA*			
1	76-50-00	2-4	June 01 2019	DOA*			
1	78-10-00	2-5	June 01 2019	DOA*			
1	79-20-00	2-4, 6, 7, 9, 11, 12	June 01 2019	DOA*			
1	80-10-00	2,3	June 01 2019	DOA*			

Rev no.	Chapter	Page	Date of change	Remark for approval	Date of approval from authori-ties	Date of inclusion	Signature
2	LEP	all	February 01 2020	DOA*			
2	TOA	all	February 01 2020	DOA*			
2	00-00-00	14-19	February 01 2020	DOA*			
2	24-20-00	3	February 01 2020	DOA*			
2	24-30-00	4	February 01 2020	DOA*			
2	61-20-00	2-4	February 01 2020	DOA*			
2	71-20-00	4	February 01 2020	DOA*			
2	72-10-00	3-7	February 01 2020	DOA*			
2	72-20-00	5, 7	February 01 2020	DOA*			
2	73-10-00	3,4, 6,9, 13	February 01 2020	DOA*			
2	74-20-00	4	February 01 2020	DOA*			
2	75-20-00	5,6,8	February 01 2020	DOA*			
2	76-10-00	3	February 01 2020	DOA*			
2	76-50-00	3	February 01 2020	DOA*			
2	78-10-00	3, 5-8	February 01 2020	DOA*			
2	79-20-00	3,4,6, 7,9-12	February 01 2020	DOA*			
2	80-10-00	–	February 01 2020	DOA*			

Summary of amendments

Summary of the relevant amendments in this context, but without any claim to completeness.

Rev. no.	Chapter	Page	Date of change	Comment
2	78-10-00	6-8	February 01 2020	Introduction of a new turbocharger MY20
2	all other	-	February 01 2020	New part numbers due to supplier change or further development

Chapter: 00–00–00
INTRO

TOPICS IN THIS CHAPTER

GENERAL NOTE **2**
INTRODUCTION **3**
PARTS ORDER 3
Engine view and denomination of the cylinders **4**
Repeating symbols **5**
Structure 6
REPAIR TOOLS **8**
LUBRICANTS **18**
DOCUMENTATION, LABELS, GASKET SETS **20**

GENERAL NOTE

Modification

The information and components-/system descriptions contained in this Illustrated Parts Catalog are correct at the time of publication.
BRP-Rotax, however, maintains a policy of continuous improvement of its products without imposing upon itself any obligation to install them on its products previously manufactured. BRP-Rotax reserves the right at any time to discontinue or change specification, designs, features, models or equipment without incurring obligation.

Note

This Illustrated Parts Catalog is not an offer to sell parts, but a catalog illustrating the parts available at ROTAX® authorized distributors.
BRP-Rotax reserves the right to deliver the components (crankshaft, crankcase, special tools etc.) only to organizations with respective qualifications, and thus, these special components will not be listed in this IPC.

Color variations

Color variations on unpainted castings:

On unpainted surfaces (i.e. aluminium cases) minor color variations (i.e. grey tone on aluminum surface) are possible due to the manufacturing process. Such possible color variations do not affect the quality of the product and are no reason for rejection - even a color variation on castings in differing areas is acceptable.

Tightening torque

Generally all the fasteners on a ROTAX® engine are tightened with a torque wrench. The tightening torque must always be done according to the content of the latest Maintenance Manual Heavy for the respective engine type.

Revision

This Illustrated Parts Catalog (IPC) will be revised as required.

NOTE

Date of issue or number of revision is printed on cover and bottom end of page.

INTRODUCTION

Explanation

As obvious from the cover, this Illustrated Parts Catalog covers the current aircraft engines ROTAX® 915 i A Series. Certified and non-certified versions are available. Besides the engine-specific parts, the most popular accessories are listed too.

The ROTAX® engine of the type 915 iSc A has been certified in accordance with EASA CS-E.
The ROTAX® engine of the type 915 iS A has shown ASTM F2339 compliance.

PARTS ORDER

At a parts order for a certified engine, state details of application e.g. 915 iSc A certified to EASA CS-E.
For these parts an Authorized Release Certificate (FORM ONE TAG, see sample below) will be issued. For parts volume see enclosed packing slip.

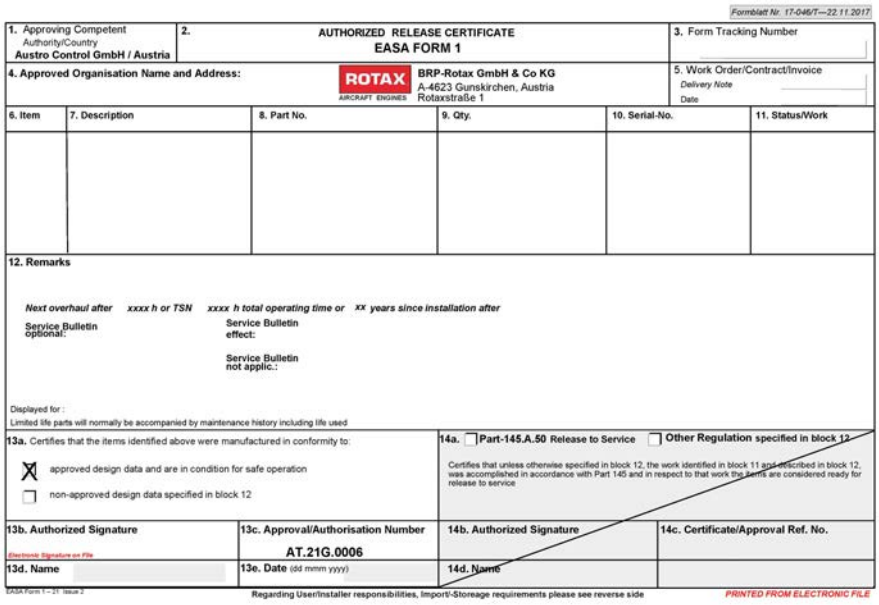
Formblatt Nr. 17-046/T—22.11.2017

1. Approving Competent Authority/Country Austro Control GmbH / Austria	2. AUTHORIZED RELEASE CERTIFICATE EASA FORM 1	3. Form Tracking Number
4. Approved Organisation Name and Address:	ROTAX AIRCRAFT ENGINES BRP-Rotax GmbH & Co KG A-4623 Gunskirchen, Austria Rotaxstraße 1	5. Work Order/Contract/Invoice Delivery Note Date

6. Item	7. Description	8. Part No.	9. Qty.	10. Serial-No.	11. Status/Work

12. Remarks

Next overhaul after xxxx h or TSN xxxx h total operating time or xx years since installation after

Service Bulletin optional:

Service Bulletin effect:

Service Bulletin not applic.:

Displayed for :
Limited life parts will normally be accompanied by maintenance history including life used

13a. Certifies that the items identified above were manufactured in conformity to:
☒ approved design data and are in condition for safe operation
☐ non-approved design data specified in block 12

14a. ☐ Part-145.A.50 Release to Service ☐ Other Regulation specified in block 12
Certifies that unless otherwise specified in block 12, the work identified in block 11 and described in block 12, was accomplished in accordance with Part 145 and in respect to that work the items are considered ready for release to service

13b. Authorized Signature	13c. Approval/Authorisation Number	14b. Authorized Signature	14c. Certificate/Approval Ref. No.
Electronic Signature on File	AT.21G.0006		
13d. Name	13e. Date (dd mmm yyyy)	14d. Name	

EASA Form 1 – 21 Issue 2 Regarding User/Installer responsibilities, Import/-Storeage requirements please see reverse side PRINTED FROM ELECTRONIC FILE

Figure 1.1

NOTE

On all enquiries or spare part orders, always indicate engine serial number, as the manufacturer makes modification to engine for further development.

Engine serial number

When making inquiries or ordering parts, always indicate the engine serial number, as the engine manufacturer might make modifications to the engine in the course of product improvement. The engine serial number is on top of the crankcase, behind the propeller gearbox.

ENGINE VIEW AND DENOMINATION OF THE CYLINDERS

PTO	power take off side
MAG	magneto side
Cyl. 1	Cylinder 1
Cyl. 2	Cylinder 2
Cyl. 3	Cylinder 3
Cyl. 4	Cylinder 4

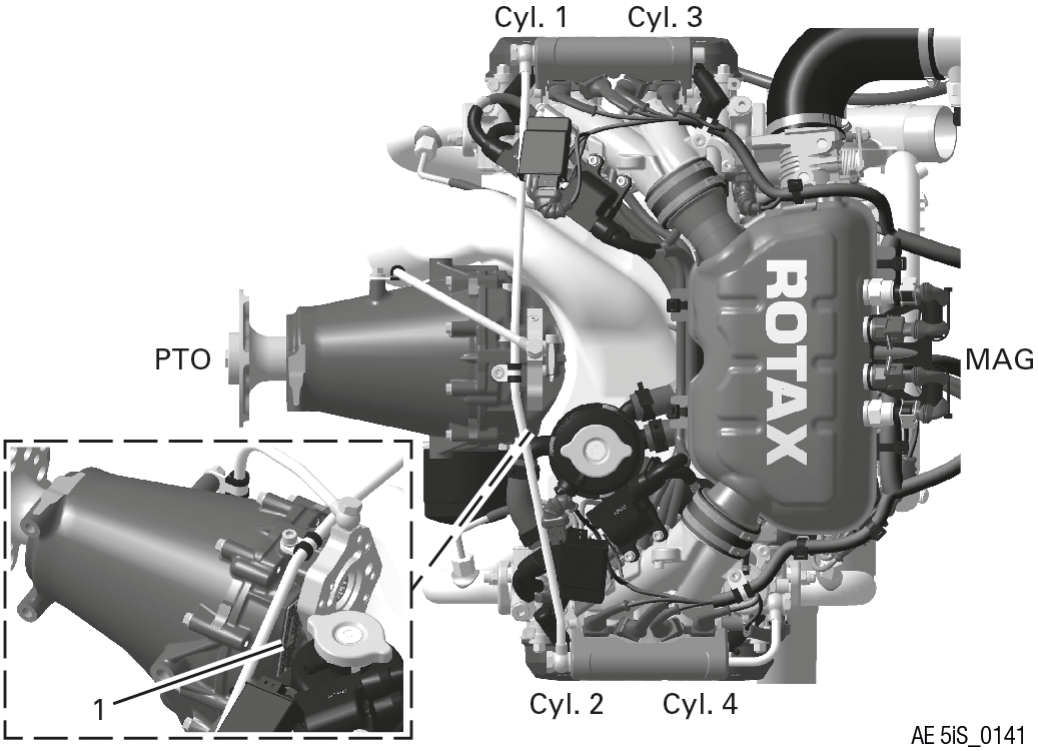

Figure 1.2: Engine view, TYPICAL

1 Engine type plate

REPEATING SYMBOLS

Safety notice

This catalog uses the following symbols to emphasize particular information. These indications are important and must be respected.

⚠ WARNING
Identifies an instruction which, if not followed, may cause serious injury or even fatal injury.

⚠ CAUTION
Identifies an instruction which, if not followed, may cause minor or moderate injury.

ATTENTION
Identifies an instruction which, if not followed, may severely damage the engine or could void any warranty.

NOTE

Indicates supplementary information which may be needed to fully complete or understand an instruction.

XXX In illustrations this sign indicates the position of the current serial number (e. g. on crankshaft, camshaft, etc.).
In descriptions (in part no. column) this sign indicates that this part is described in an other chapter.

A revision bar outside the page margin indicates a change to text or graphic.

STRUCTURE

Exploded view

Each section starts with an exploded view of the type 915 i on the left side. The corresponding heading and the listing of the parts is on the right side and the following pages. The numbering on the exploded view is in the sequence of assembly as much as practicable.
For prevention of errors and to simplify exchange we tried best to list the part number of each component only once. But for better understanding components are frequently depicted without being listed, but referred to a respective section, if considered necessary.

Engine-column

For each engine type the right amount of spare parts per engine is listed in the relevant engine-column.
If the quantity is in brackets it indicates that the part is not absolutely necessary but optional on the respective engine type.
A small letter added to the number refers to information at the end of the section.
No number in the column parts per assembly indicates that this part is not planned for the respective engine.

Abbreviations

Find the following statements in the columns:

N	newly introduced part
s.v.	still valid, part was replaced by compatible component and can not be supplied any longer by the producer. Superseded parts are still valid and usable unless otherwise specified by a service document.
n.a.	not available
NC	non-certified
AR	as required

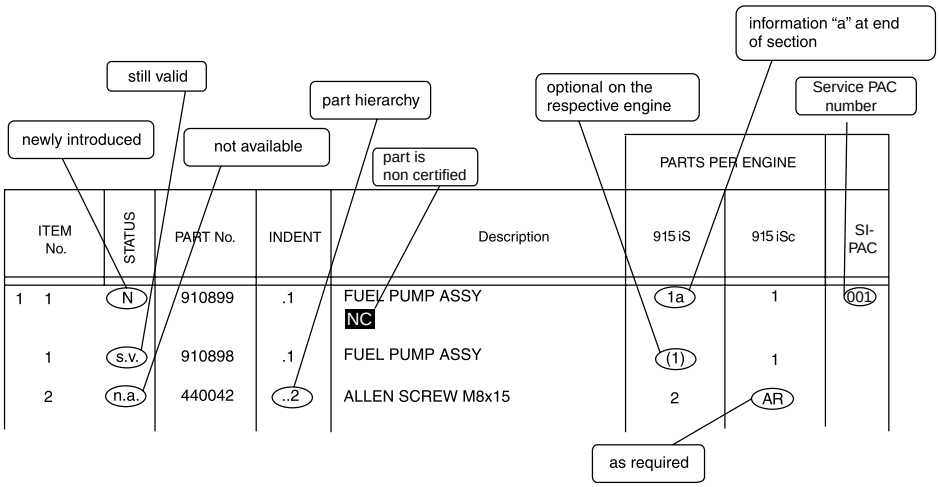
information “a” at end of section
still valid
part hierarchy
optional on the respective engine
Service PAC number
newly introduced
not available
part is non certified
PARTS PER ENGINE
ITEM No.
STATUS
PART No.
INDENT
Description
915 iS
915 iSc
SI-PAC
1 1
N
910899
.1
FUEL PUMP ASSY
NC
1a
1
001
1
s.v.
910898
.1
FUEL PUMP ASSY
(1)
1
2
n.a.
440042
..2
ALLEN SCREW M8x15
2
AR
as required

Figure 1.3

REPAIR TOOLS

NOTE

All Repair tools are non-certified parts.

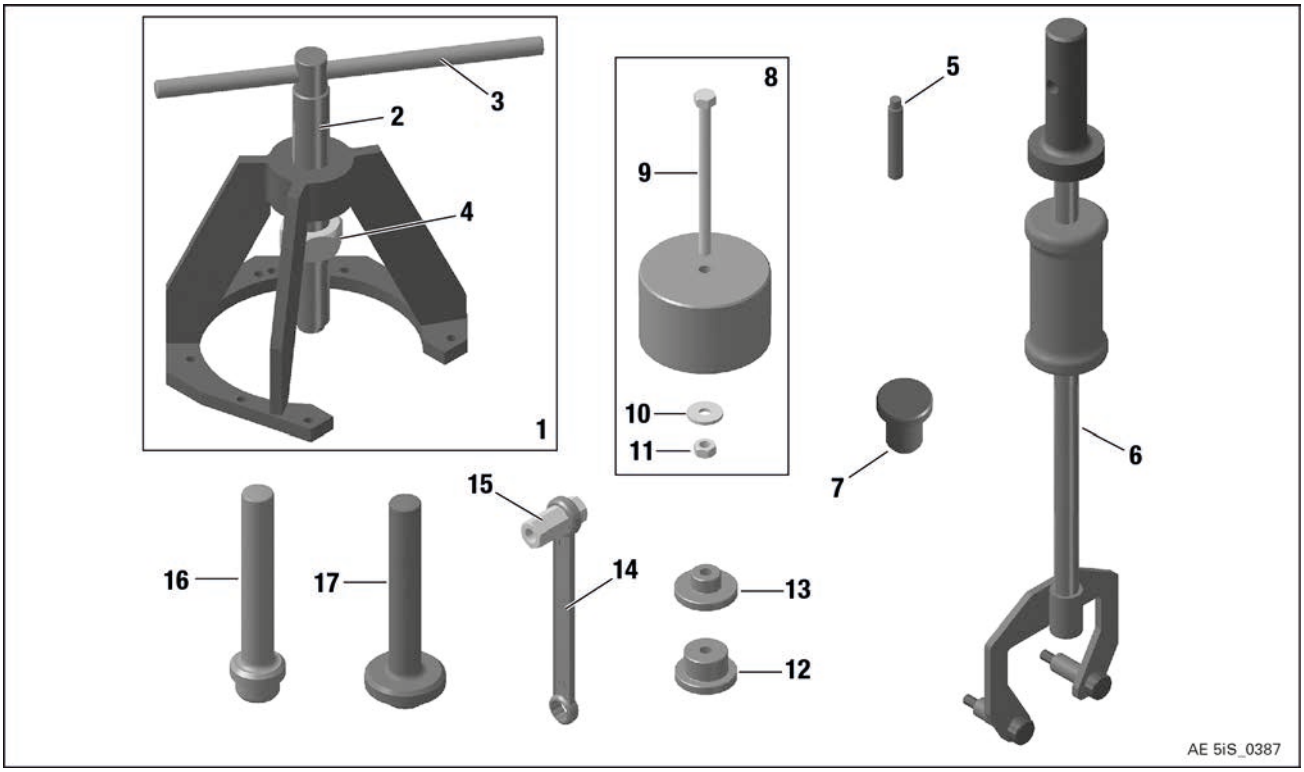

Figure 1.4: Repair tools

ITEM NO.	APPLICATION	ITEM NO.	APPLICATION
1-4	Roller bearing 25x25x15, oil seal 30x52x7	13	Ball bearing 15x32x8 - governor drive
5	Crankshaft locking screw M8x50	14	Ring wrench 10/13
6	Gearbox	15	Fixture for governor drive
7	Crankshaft (magneto side)	16	Ball bearing 15x32x8, needle sleeve - governor drive
8-11	Ball bearing 15x32x8 - oil inlet flange, oil inlet cover	17	Oil seal 22x32x7 - governor drive
12	Needle bearing 22x28x12 - governor drive		

					Parts per Engine	
Item No.	**Sta-tus**	**PART NO.**	**INDENT**	**DESCRIPTION**	**915 iS A**	**915 iSc A**
1-4		877615	.1	EXTRACTOR ASSY.	1	1
2		877580	..2	PULL-IN SPINDLE M24x1.5	1	1
3		276155	..2	BOLT 12x250	1	1
4		842585	..2	HEX. SCREW M24x1.5	1	1
5		240880	.1	THREAD BOLT M8x50	1	1
6		877660	.1	PULLER ASSY.	1	1
7		877419	.1	PROTECTION MUSHROOM	1	1
8-11		876489	.1	PULLER ASSY.	1	1
9		941730	..2	HEX. SCREW M6x80	1	1
10		827305	..2	WASHER 6.2/18/2	1	1
11		242214	..2	HEX. NUT M6	1	1
12		877597	.1	PRESS-IN MUSHROOM	1	1
13		877595	.1	PRESS-IN MUSHROOM	1	1
14		876470	.1	RING SPANNER 10/13	1	1
15		242661	.1	DISTANCE NUT M8x33	1	1
16		276332	.1	INSERTION JIG ASSY.	1	1
17		877276	.1	INSERTION JIG ASSY.	1	1

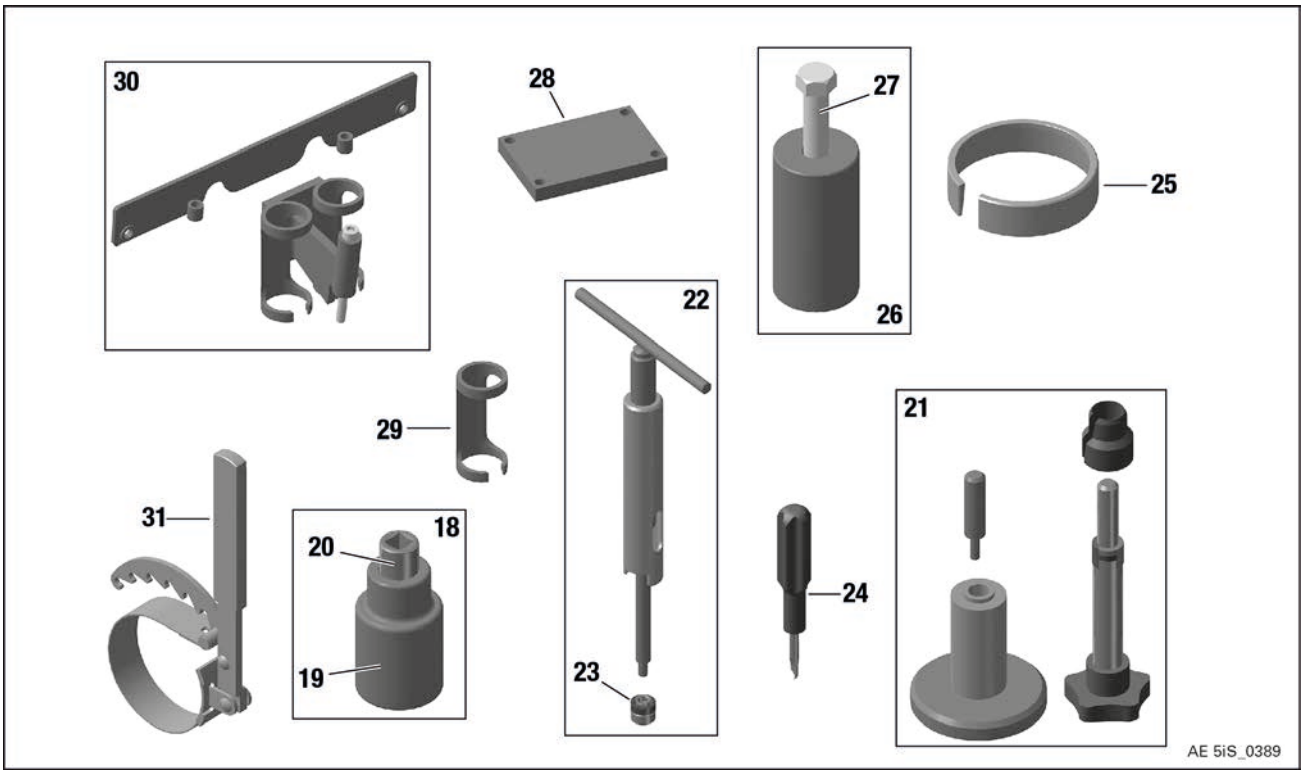

Figure 1.5: Repair tools

ITEM NO.	APPLICATION	ITEM NO.	APPLICATION
18-20	Drive gear, gearbox, gear set	26-27	Puller magneto hub
21	Fitting of piston pin circlips	28	To align cylinders
22-23	Fitting and removal of piston pin	29-30	Installation/Removal of valve spring
24	Monohook clips puller	31	Oil filter removal
25	Piston diameter 84 mm / 33 in.		

					Parts per Engine	
Item No.	**Sta-tus**	**PART NO.**	**INDENT**	**DESCRIPTION**	**915 iS A**	**915 iSc A**
18-20		877445	.1	SOCKET WRENCH ASSY. 41x12.5	1	1
19		877440	..2	SOCKET WRENCH A/F 41x20	1	1
20		877460	..2	REDUCING SOCKET 3/4”-1/2”	1	1
21		877802	.1	CIRCLIP INSTALLATION TOOL	1	1
22-23		877091	.1	PISTON PIN EXTRACTOR ASSY.	1	1
23		877155	..2	EXTRACTING NUT ASSY.	1	1
24		976380	.1	MONOHOOK CIRCLIP REMOVER	1	1
25		876967	.1	PISTON RING SPANNER 84 MM (3.31 in.)	1	1
26-27		877375	.1	PULLER ASSY.	1	1
27		940755	..2	HEX. SCREW M16x1.5x150	1	1
28		877263	.1	CYLINDER ALIGNING TOOL	1	1
29		877380	.1	VALVE SPRING MOUNTING DEVICE	1	1
30		877387	.1	VALVE SPRING LOADING JIG ASSY.	1	1
31		877620	.1	OIL FILTER WRENCH	1	1

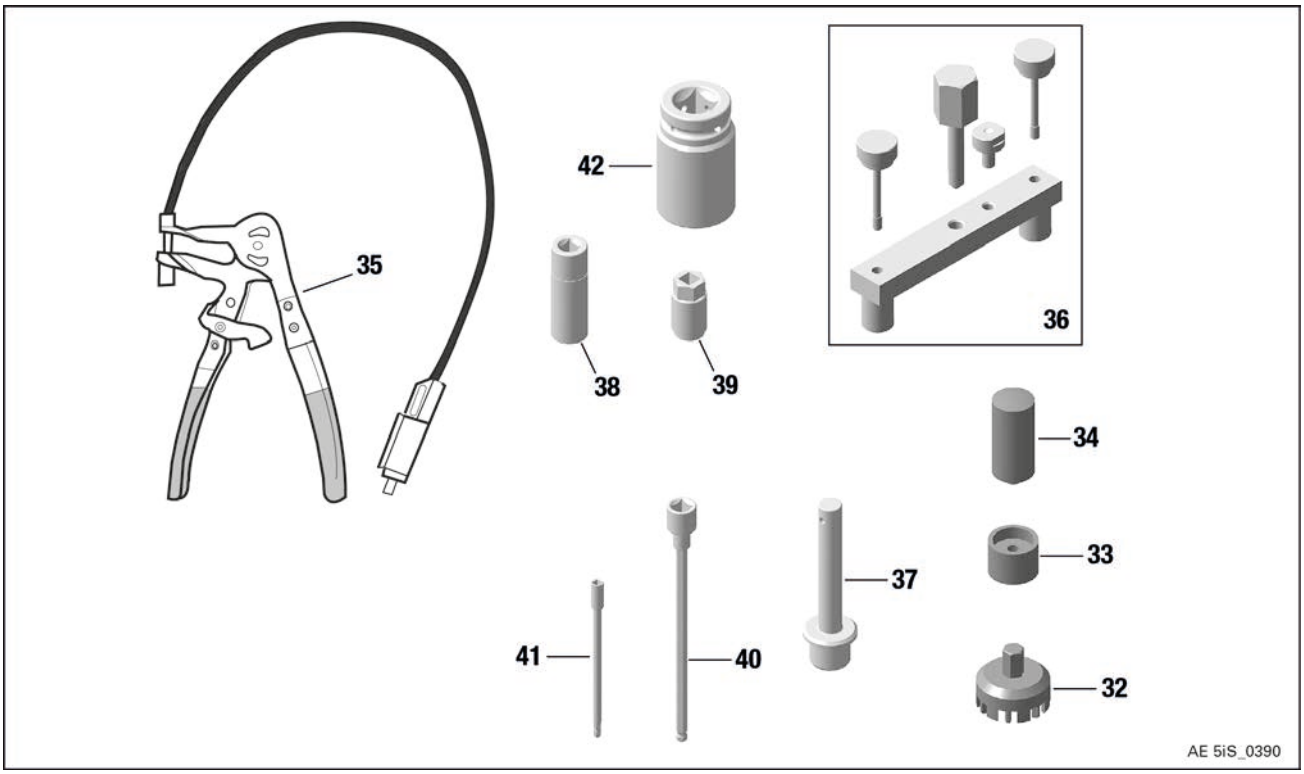

Figure 1.6: Repair tools

ITEM NO.	APPLICATION	ITEM NO.	APPLICATION
32	Water pump impeller	38	Pressure sensor Oil and Airbox
33	Rotary seal ignition housing	39	Temperature sensor Oil and Water
34	Oil seal 12x30x7 water pump shaft	40	Engine mount
35	Spring type hose clip 28	41	Intake manifold
36	Ignition housing	42	Nut for sprag clutch housing
37	Oil seal 28x38x7 ignition housing		

					Parts per Engine	
Item No.	**Sta-tus**	**PART NO.**	**INDENT**	**DESCRIPTION**	**915 iS A**	**915 iSc A**
32		877295	.1	IMPELLER WRENCH ASSY.	1	1
33		877258	.1	PRESS ON DEVICE ASSY.	1	1
34		876510	.1	INSERTION JIG	1	1
35		877840	.1	SPRING CLAMP PLIERS	1	1
36		876010	.1	PULLER ASSY.	1	1
37		876020	.1	INSERTION JIG.	1	1
38		876075	.1	SOCKET WRENCH 21x12.5	1	1
39		876130	.1	SOCKET WRENCH 19x12.5	1	1
40		876240	.1	SOCKET DRIVER HEX. 8 BALL HEAD	1	1
41		876180	.1	SOCKET DRIVER T30 BALL HEAD	1	1
42		876070	.1	SOCKET WRENCH 38x20	1	1

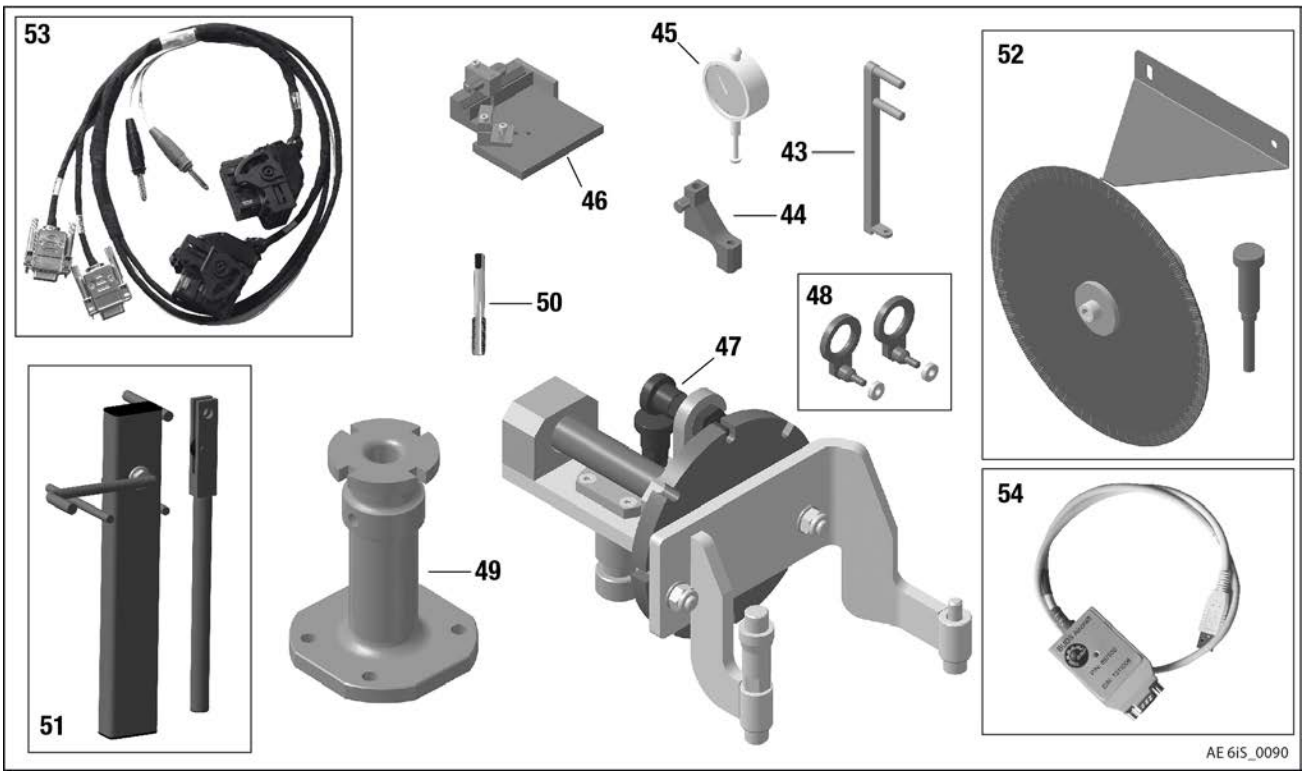

Figure 1.7: Repair tools

ITEM NO.	APPLICATION	ITEM NO.	APPLICATION
43	Crankcase	49	Trestle support
44-45	Dial gauge	50	Thread bent socket
46	Dial gauge adapter for valve seat inspect	51	Oil filter
47	Crankcase	52	Twist of crankshaft
48	Engine removal	53	ECU (Engine Control Unit)
54	Flashing tool		

					Parts per Engine	
Item No.	**Sta-tus**	**PART NO.**	**INDENT**	**DESCRIPTION**	**915 iS A**	**915 iSc A**
43		877690	.1	CHECK LEVER	1	1
44		877710	.1	DIAL GAUGE ADAPTER ASSY.	1	1
45		876950	.1	PRECISION DIAL GAUGE	1	1
46		976140	.1	DIAL GAUGE ADAPTER ASSY.	1	1
47		876050	.1	TRESTLE ADAPTER ASSY.	1	1
48		876040	.1	ENGINE LIFT SET ASSY.	1	1
49		877930	.1	TRESTLE SUPPORT	1	1
50		877570	.1	TAPPING DRILL M18x1	1	1
51	N s.v.	276275 877670	.1	CUTTING TOOL	1	1
52		877520	.1	PROTRACTOR CRANK-SHAFT DISTORTION INSP.	1	1
53		864280	.1	SERVICE WIRING HAR-NESS ASSY.	1	1
54		864021	.1	B.U.D.S. SET LEVEL 1 for pi-lots/users	1	1
54		864022	.1	B.U.D.S. SET LEVEL 2 for maintenance personnel	1	1
54		864023	.1	B.U.D.S. SET LEVEL 3 for distributors/OEM	1	1

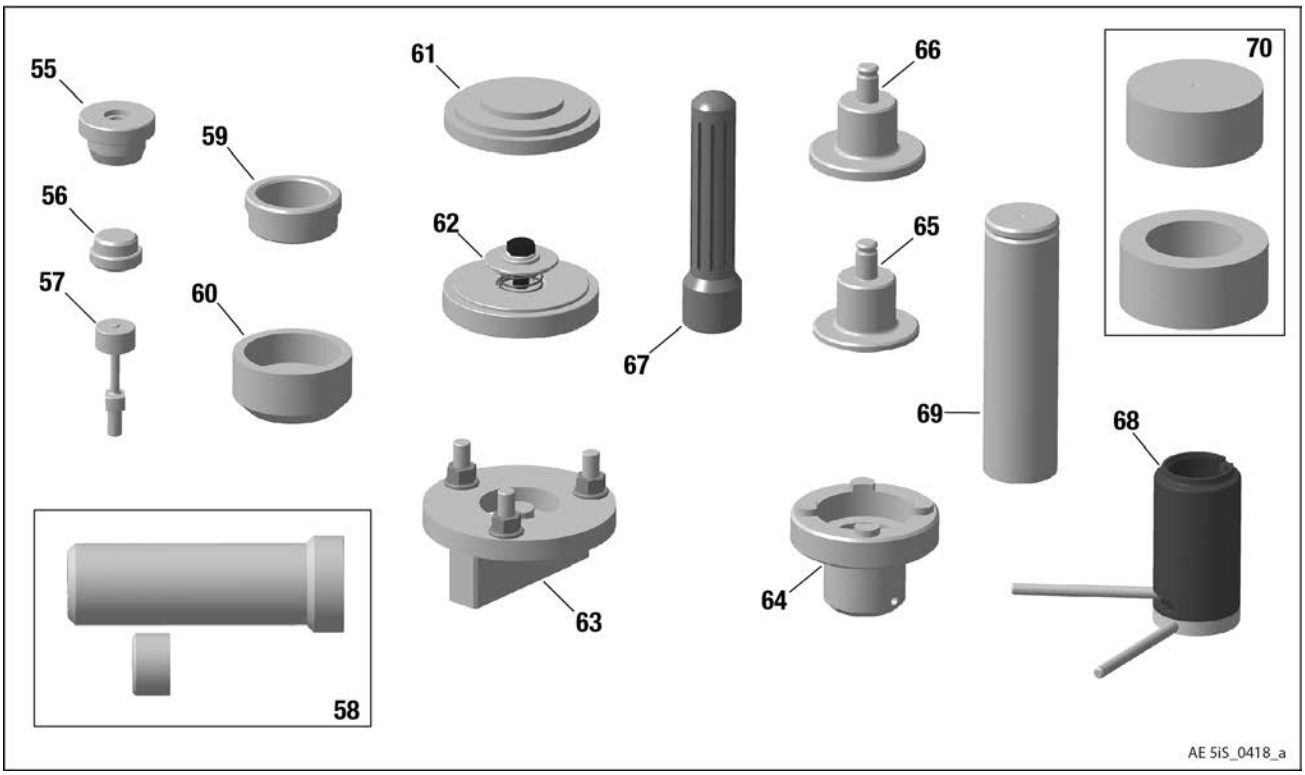

Figure 1.8: Repair tools

ITEM NO.	APPLICATION	ITEM NO.	APPLICATION
55	Needle bearing, crankcase	63	Propeller shaft bracket / mounting flange
56	Propeller shaft removal	64	Installation of overload clutch with damper clutch
57	Needle bearing removal	65	Sealing ring, gearbox
58	Hex. nut on propeller shaft	66	Ball bearing, gearbox
59	Damper clutch	67	Stamp
60	Damper clutch	68	Retaining ring, propeller shaft
61	Damper clutch	69	Ball bearing, propeller shaft
62	Damper clutch	70	Overload clutch

					Parts per Engine	
Item No.	**Sta-tus**	**PART NO.**	**INDENT**	**DESCRIPTION**	**915 iS A**	**915 iSc A**
55		276000	.1	PRESS IN JIG	1	1
56		276002	.1	PRESS OUT MUSHROOM	1	1
57		276004	.1	PULL STUD	1	1
58		276006	.1	SOCKET WRENCH AF 46	1	1
59		276950	.1	CENTERING RING	1	1
60		276952	.1	INSERTION JIG	1	1
61		276954	.1	CENTERING PLATE	1	1
62		276956	.1	CENTERING PLATE	1	1
63		276958	.1	SUPPORT PLATE	1	1
64		276962	.1	TWIST TOOL	1	1
65		276964	.1	INSERTION JIG	1	1
66		276966	.1	INSERTION JIG	1	1
67		877650	.1	HANDLE FOR INSERTION JIG	1	1
68		276968	.1	RETAINING RING TOOL	1	1
69		276972	.1	INSERTION SLEEVE	1	1
70		276974	.1	INSERTION JIG	1	1

LUBRICANTS

NOTE

All lubricants are non-certified.

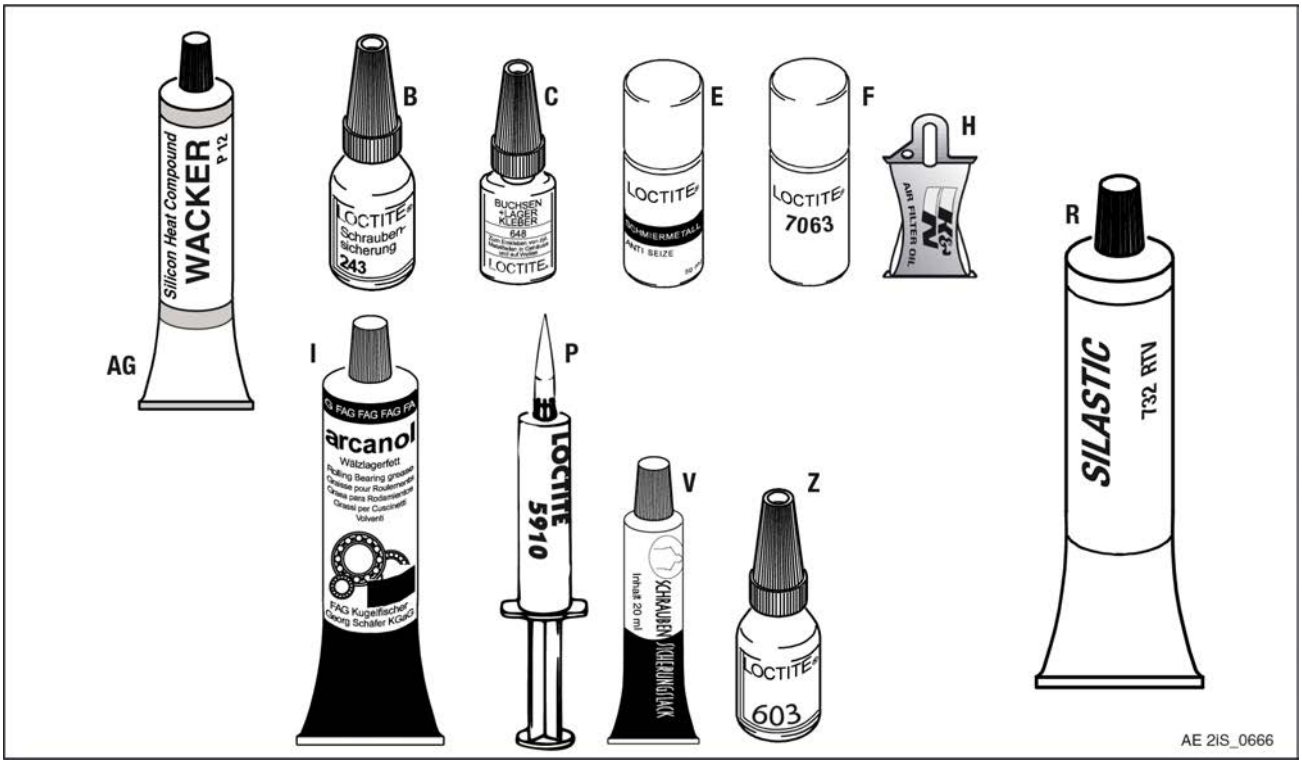

Figure 1.9: Lubricants

ITEM NO.	APPLICATION	ITEM NO.	APPLICATION
AG	For better heat transfer from the spark plugs	I	Roller bearing grease, for smooth running
B	Medium strength bond 10 cc.	P	Regular body/high adhesion flexible flange sealant
C	High strength bond 5 ml.	R	For vibration damping
E	To prevent metal galling 50 cc.	V	For marking
F	Cleaner	Z	High strength bond 10 cc.
H	Blister 14.8 ml.		

					Parts per Engine	
Item No.	**Sta-tus**	**PART NO.**	**IN-DENT**	**DESCRIPTION**	**915 iS A**	**915 iSc A**
AG		897186	.1	SILICONE HEAT COMPOUND WACKER P12, 150 GR.	1	1
B		897651	.1	LOCTITE 243 BLUE, 10 CC.	1	1
C		899788	.1	LOCTITE 648 GREEN, 5 ML. (CC).	1	1
E		297434	.1	LOCTITE ANTI SEIZE 50 ML.	1	1
F		xxx	.1	LOCTITE 7063	1	1
H		897870	.1	K&N FILTER OIL 99-11312	1	1
I		897330	.1	LITHIUM-BASED GREASE, 250 GR.	1	1
O		xxx	.1	ENGINE OIL	1	1
P		899791	.1	LOCTITE 5910, 50 ML.	1	1
R		297386	.1	SILASTIC 232 RTV	1	1
V		898570	.1	LOCKING PAINT	1	1
Z		899789	.1	LOCTITE 603	1	1

DOCUMENTATION, LABELS, GASKET SETS

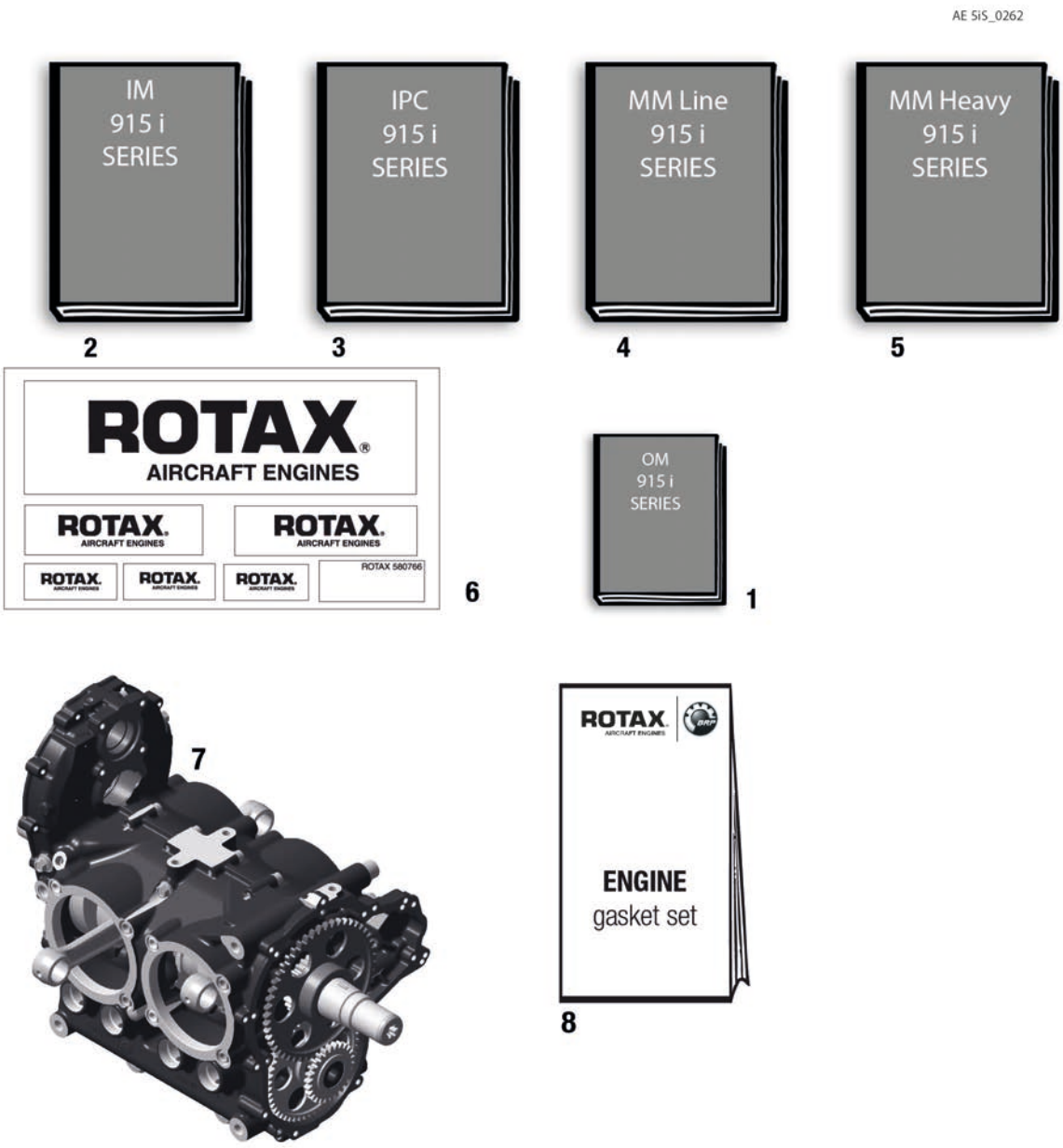

Figure 1.10

					Parts per Engine	
Item No.	**Status**	**PART NO.**	**INDENT**	**DESCRIPTION**	**915 iS**	**915 iSc A**
1		898851	.1	OPERATORS MANUAL	1	1
2		898871	.1	INSTALLATION MANUAL	1	1
3		898891	.1	ILLUSTRATED PARTS CATALOG	1	1
4		898863	.1	MAINTENANCE MANUAL LINE	1	1
5		898861	.1	MAINTENANCE MANUAL HEAVY	1	1
6		580683	.1	ROTAX STICKER KIT AIRCRAFT NC		1
6		580691	.1	ROTAX STICKER KIT AIRCRAFT NC	1	´
7		xxx	.1	ENGINE BLOCK See chap. 72–20–00	1	1
8		686245	.1	GASKET SET	1	1

INTENTIONALLY LEFT
BLANK

Chapter: 24–20–00
IGNITION HOUSING, STATOR, RECTIFIER REGULATOR, CRANKSHAFT POSITION SENSOR ASSY.

TOPICS IN THIS CHAPTER

IGNITION HOUSING, STATOR, CRANKSHAFT POSITION SENSOR 2

IGNITION HOUSING, STATOR, CRANKSHAFT POSITION SENSOR

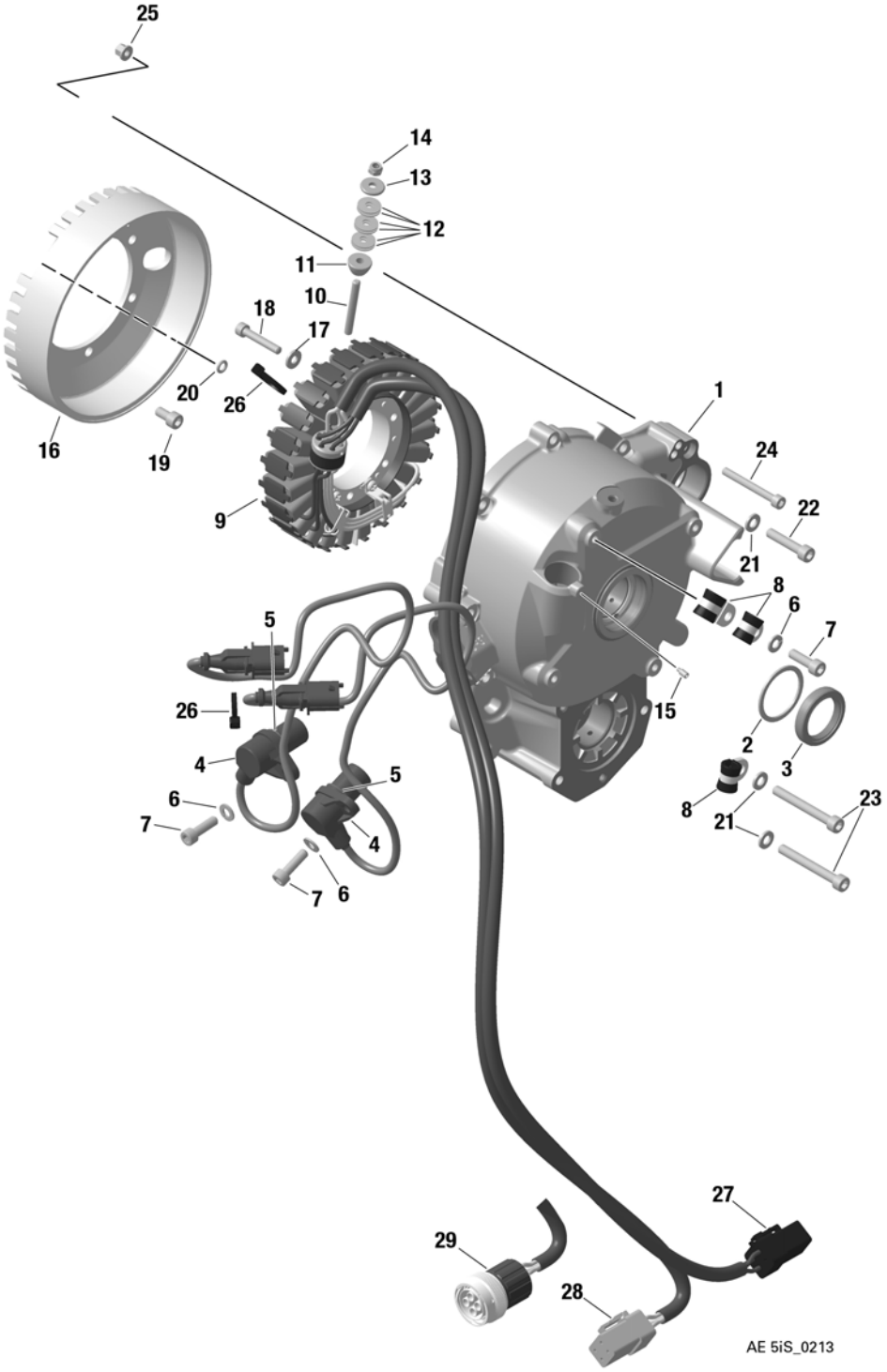

Figure 2.1: 24-20-00

					Parts per Engine		
Item No.	Sta-tus	Part No.	In-dent	Description	915 iS A	915 iSc A	SI-PAC
1	N s.v.	912248 912247	.1	IGNITION HOUSING ASSY.	1	1	
2		827220	.1	WASHER 32/38/1.5	1	1	
3		230428	.1	OIL SEAL GPRE 28x38x7 FKM	1	1	
4-5		966572	.1	CRANKSHAFT POSITION SENSOR	2	2	
5		431580	..2	O-RING 17.17x1.78 FPM 70	2	2	
6	N s.v.	945831 945751	.1	LOCK WASHER A6	3	3	
7	N s.v.	241935 241930	.1	ALLEN SCREW M6x20	2	2	
8		853412	.1	CABLE CLAMP	3	3	
9	N	685067	.1	STATOR ASSY.	1a	1a	
9	s.v.	685062	.1	STATOR ASSY.	1	1	
10		840792	.1	STUD M5x44	1	1	
11		947510	.1	DISTANCE SLEEVE	1	1	
12		938080	.1	DISK SPRING 15x5.2x0.7	6	6	
13		827240	.1	WASHER 5.1/15.5/2.5	1	1	
14		842033	.1	LOCK NUT M5	1	1	
15		840820	.1	ADJUSTMENT SCREW M4x8	1	1	
16		685072	.1	MAGNETO FLYWHEEL ASSY.	1	1	
17	N s.v.	827801 827800	.1	WASHER A 5.5	6	6	
18		940881	.1	ALLEN SCREW M5x30	6	6	
19		840036	.1	ALLEN SCREW M6x12	6	6	
20		xxx	.1	O-RING 5x2 see chap. 72–20–00	1	1	
21	N s.v.	827962 827961	.1	WASHER 6.4	7	7	
22		840880	.1	ALLEN SCREW M6x30	5	5	
23		241761	.1	ALLEN SCREW M6x50	2	2	
24		941791	.1	ALLEN SCREW M5x45	2	2	
25		942311	.1	HEX. NUT M5	2	2	

					Parts per Engine		
Item No.	**Sta-tus**	**Part No.**	**In-dent**	**Description**	**915 iS A**	**915 iSc A**	**SI-PAC**
26		866714	.1	TIE WRAP 142x3.2 mm	2	2	
27		xxx	.1	CONNECTOR SET BLACK see chap. 76–10–00	1	1	
28		xxx	.1	CONNECTOR SET GREY see chap. 76–10–00	1	1	
29		xxx	.1	CONNECTOR SET AMPHENOL see chap. 76–10–00	1	1	

a with round Amphenol connector for generator B

Chapter: 24–30–00
EXTERNAL GENERATOR F3A (ALL PARTS OPTIONAL)

TOPICS IN THIS CHAPTER

EXTERNAL GENERATOR F3A 2

EXTERNAL GENERATOR F3A

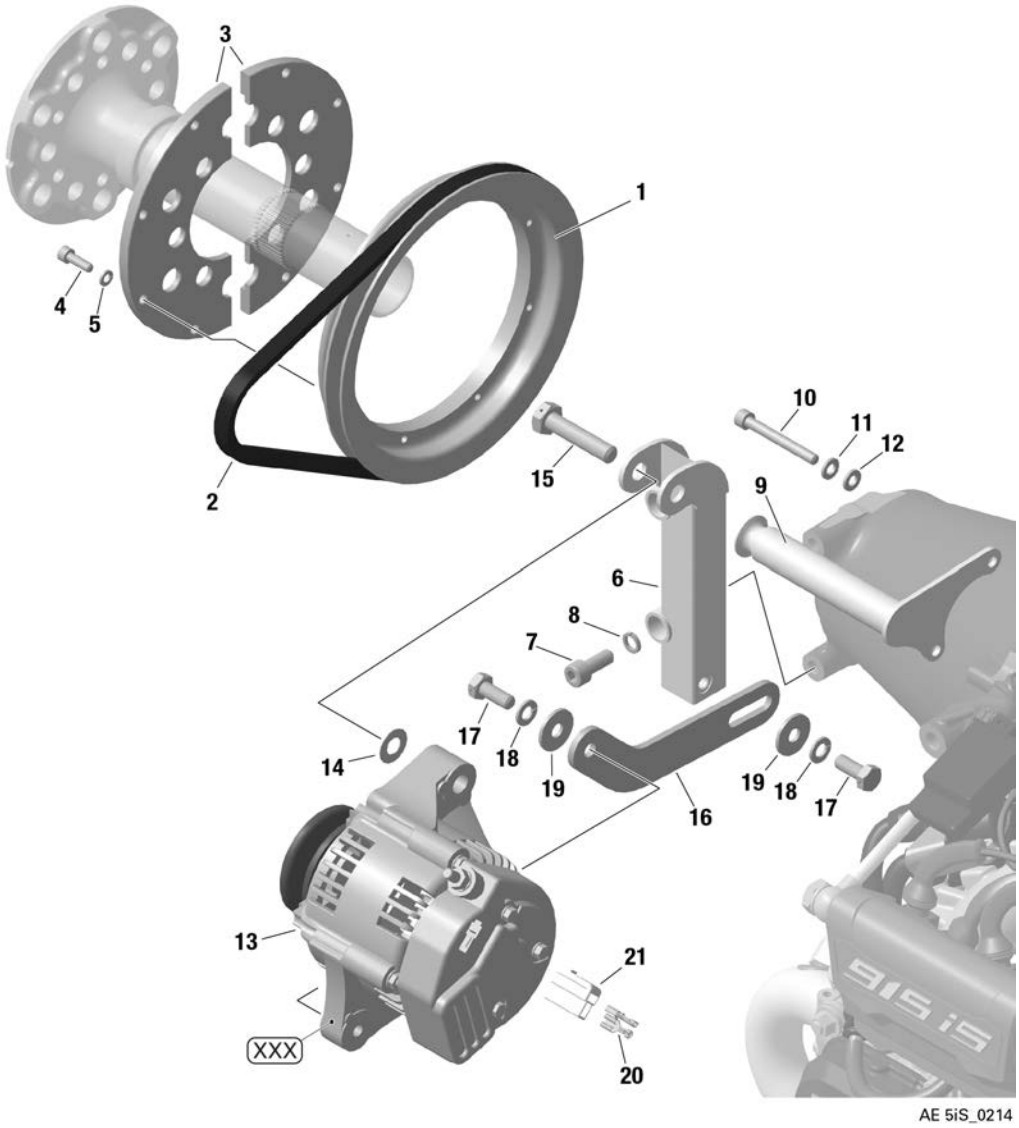

Figure 3.1: 24–30–00

					Parts per Engine		
Item No.	**Sta-tus**	**Part No.**	**In-dent**	**Description**	**915 iS A**	**915 iSc A**	**SI-PAC**
1–21		887259	.1	ALTERNATOR SET NC	(1)	(1)	001
1		980590	..2	V-BELT PULLEY NC	(1)	(1)	001
2		980400	..2	V-BELT 9,5X675 NC	(1)	(1)	001
3		980605	..2	PULLEY CARRIER NC	(2)	(2)	001
4	N n.a.	840514 840511	..2	ALLEN SCREW M5X16 NC	(8)	(8)	001
5	N n.a.	945830 945750	..2	LOCK WASHER A5 NC	(8)	(8)	001
6	N n.a.	953223 953222	..2	ALTERNATOR BRACKET ASSY. NC	(1)	(1)	001
7	N n.a.	240072 240071	..2	ALLEN SCREW M8X20 NC	(2)	(2)	001
8		845310	..2	LOCK WASHER VHZ 8 NC	(2)	(2)	001
9		953235	..2	ALTERNATOR SUPPORT ASSY. NC	(1)	(1)	001
10	N n.a.	241762 241761	..2	ALLEN SCREW M6X50 NC	(2)	(2)	001
11	N s.v.	945831 945751	..2	LOCK WASHER A6 NC	(2)	(2)	001
12	N s.v.	827962 827961	..2	WASHER 6.4 NC	(2)	(2)	001
13		887251	..2	ALTERNATOR F3A NC	(1)	(1)	001

					Parts per Engine		
Item No.	**Sta-tus**	**Part No.**	**In-dent**	**Description**	**915 iS A**	**915 iSc A**	**SI-PAC**
14		927952	..2	THRUST WASHER 10.1/20/0.5 NC	(1)	(1)	001
15		941636	..2	HEX. SCREW M10X45 NC	(1)	(1)	001
16		953241	..2	TENSION BAR NC	(1)	(1)	001
17		940596	..2	HEX. SCREW M8X20 NC	(2)	(2)	001
18	N s.v.	945832 945752	..2	LOCK WASHER A8 NC	(2)	(2)	001
19		227935	..2	WASHER 8.4 NC	(2)	(2)	001
20		864011	..2	FASTON CONNECTOR 6.3X0.8 NC	(2)	(2)	001
21		265255	..2	CONNECTOR HOUSING 2-POLE NC	(1)	(1)	001

Chapter: 61–20–00
ARRANGEMENT FOR CONSTANT SPEED AND FIXED PITCH PROPELLER

TOPICS IN THIS CHAPTER

ARRANGEMENT FOR CONSTANT SPEED AND FIXED PITCH PROPELLER 2

ARRANGEMENT FOR CONSTANT SPEED AND FIXED PITCH PROPELLER

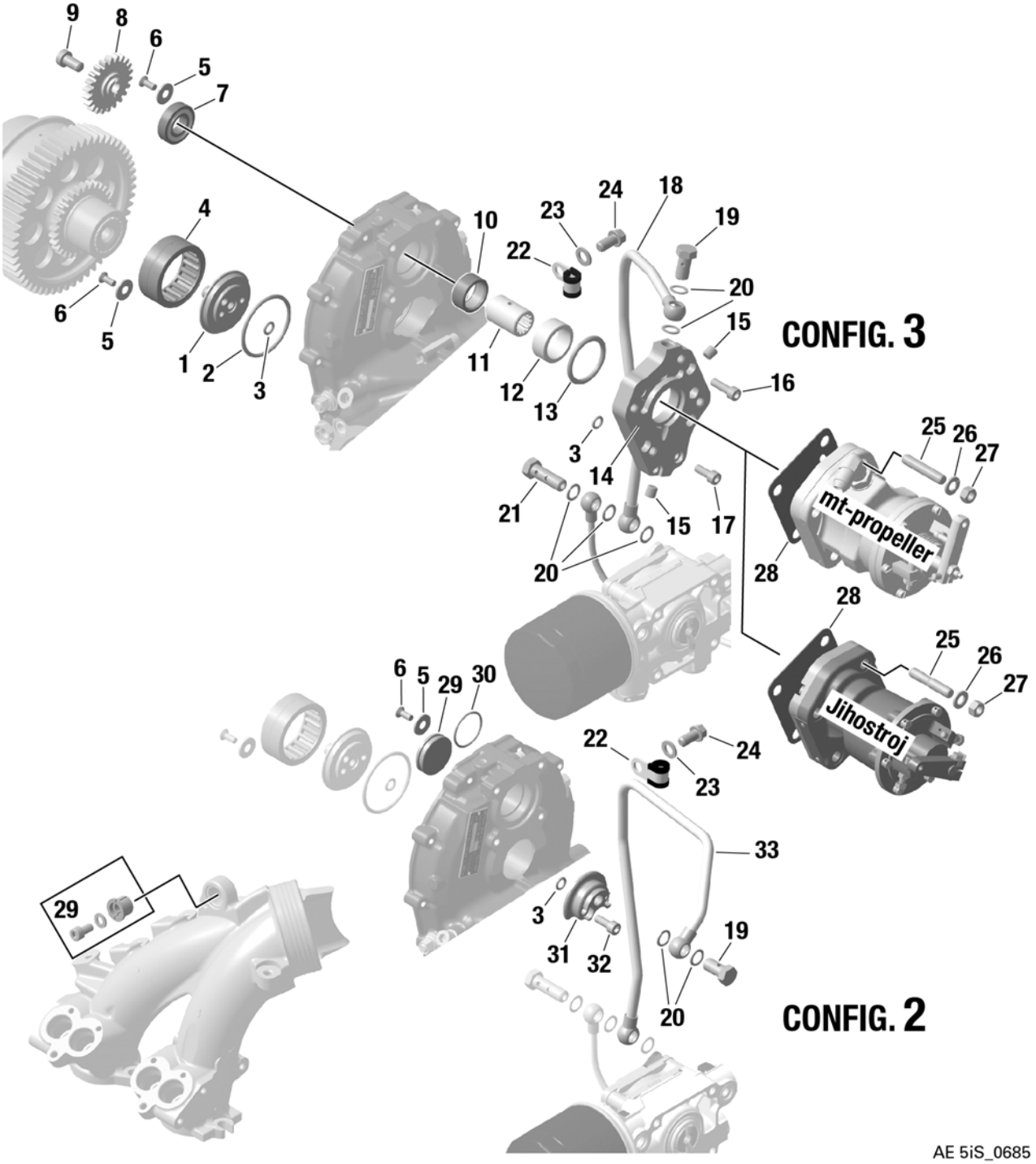

Figure 4.1: 61-20-00

					Parts per Engine		
Item No.	**Sta-tus**	**Part No.**	**In-dent**	**Description**	**915 iS A**	**915 iSc A**	**SI-PAC**
1		810310	.1	OIL INLET FLANGE	1	1	
2		430175	.1	O-RING 46x3–N, FPM 75	1	1	
3		830415	.1	O-RING 7x2–N, FPM 75	2	2	
4		832950	.1	NEEDLE BEARING RNA 49/32	1	1	
5		227280	.1	THRUST WASHER	2	2	
6		940316	.1	COUNTERSUNK SCREW M5x12	2	2	
7		832362	.1	BALL BEARING 16002. 15–32–8	1	1	
8		834245	.1	VACUUM PUMP GEAR 22 T	1	1	
9		941521	.1	ALLEN SCREW M8x16	1	1	
10		232925	.1	NEEDLE SLEEVE 22x28x12	1	1	
11		847773	.1	DRIVE SLEEVE	1	1	
12		847802	.1	SPACER 25/31.95/13	1	1	
13		950380	.1	O-RING 32x4–N FPM 75	1	1	
14		810070	.1	GOVERNOR FLANGE	1	1	
15		941611	.1	PLUG SCREW M8x1	2	2	
16	N s.v.	241935 241930	.1	ALLEN SCREW M6x20	4	4	
17	N s.v.	241237 241236	.1	ALLEN SCREW M6x16	2	2	
18		956460	.1	PRESSURE OIL LINE ASSY.	1	1	
19	N s.v.	940876 940874	.1	BANJO BOLT M10x1x23 BANJO BOLT M10x1x19	1	1	
20		230150	.1	SEALING RING A 10x14	5	5	
21	N s.v.	940877 940873	.1	BANJO BOLT M10x1x34 BANJO BOLT M10x1x30	1	1	
22		853418	.1	CABLE CLAMP	1	1	
23		944131	.1	LOCK WASHER A8	1	1	
24		440854	.1	HEX./TORX-FLANGE SCREW M8X16	1	1	
25		840711	.1	STUD M8X21/20 NC	4	4	002
26	N s.v.	945832 945752	.1	LOCK WASHER A8 NC	4	4	002

					Parts per Engine		
Item No.	**Sta-tus**	**Part No.**	**In-dent**	**Description**	**915 iS A**	**915 iSc A**	**SI-PAC**
27		942671	.1	HEX NUT M8 NC	4	4	002
28		931372	.1	GASKET NC	1	1	002
29		944222	.1	BLINDING SHIM	1a	1a	
30		430061	.1	O-RING 26.7x1.8	1a	1a	
31	N s.v.	810322 810321	.1	OIL INLET FLANGE ADAPTOR	1ab	1ab	
32		241237	.1	ALLEN SCREW M6x16	2a	2a	
33		956465	.1	GEARBOX OIL LINE	1a	1a	
34		xxx	.1	GOVERNOR CABLE KIT see chap. 73-10-00 NC	1	1	003

a Configuration 2

b 810321 only with short banjo bolt 940874

Chapter: 71–20–00
ENGINE SUSPENSION FRAME

TOPICS IN THIS CHAPTER

ENGINE SUSPENSION FRAME **2**

ENGINE SUSPENSION FRAME

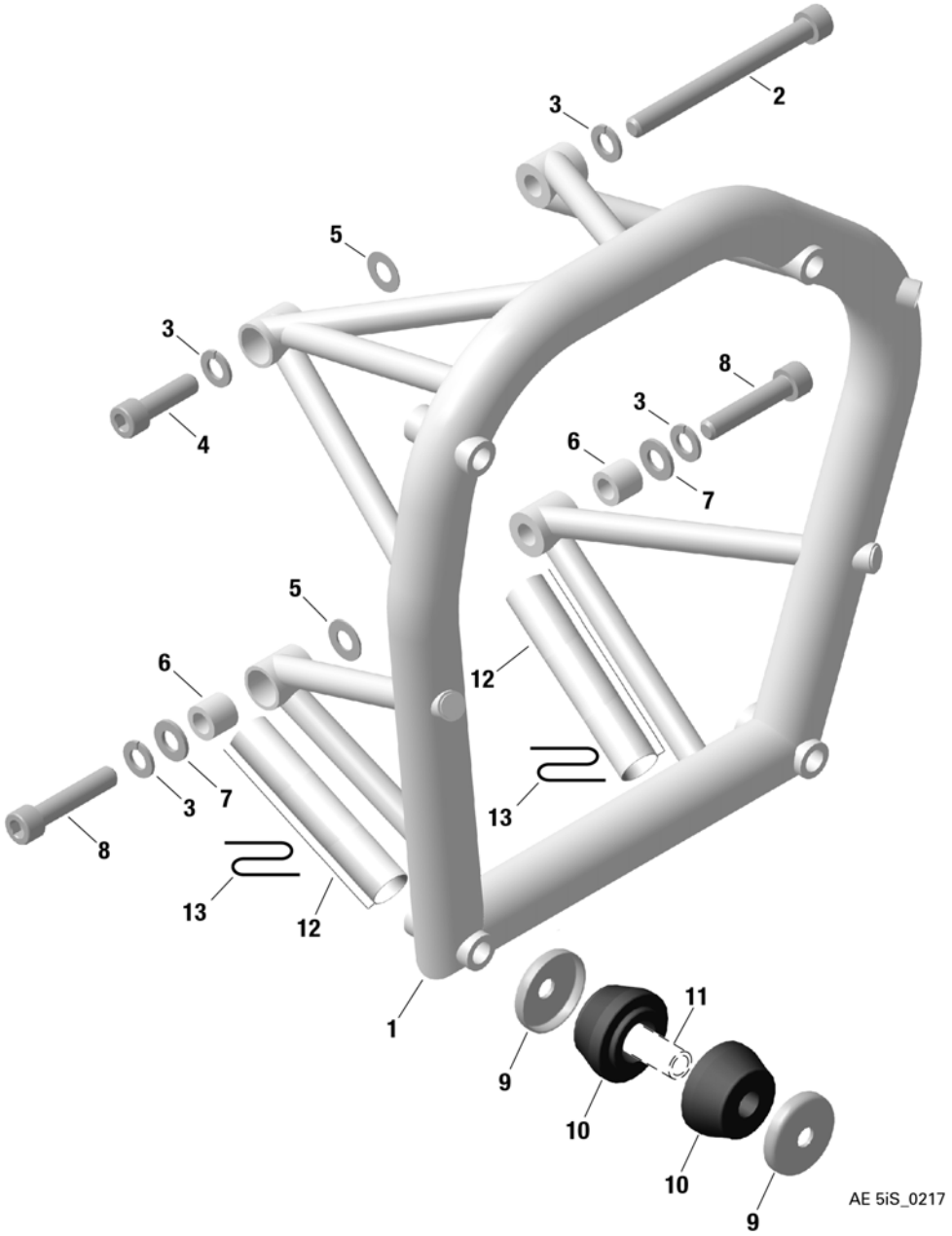

Figure 5.1: 71-20-00

					Parts per Engine		
Item No.	**Sta-tus**	**Part No.**	**In-dent**	**Description**	**915 iS A**	**915 iSc A**	**SI-PAC**
1	N s.v.	886563 886561	.1	ENGINE SUSPENSION FRAME ASSY.	1	1	
2		941487	.1	ALLEN SCREW M10x110	1	1	
3	N s.v.	945753 945833	.1	LOCK WASHER A10	4	4	
4		840948	.1	ALLEN SCREW M10x35	1	1	
5		927952	.1	THRUST WASHER 10.1/20/0.5	AR	AR	
5		927953	.1	THRUST WASHER 10.1/20/1.0	AR	AR	
6		847841	.1	SPACER 10.5/17/15	2	2	
7		927410	.1	WASHER 10.5	2	2	
8		640572	.1	ALLEN SCREW M10x50	2	2	
9-10		860695	.1	SHOCK MOUNT SET NC	1	1	004
9		944240	..2	CUP WASHER NC	8	8	004
10		860690	..2	SHOCK-MOUNT NC	8	8	004
11	n.a.		.1	STRUT not available at BRP-Rotax NC	4	4	004
12		860650	.1	PROTECTION TUBE 110 MM	ARa	ARa	
13		297555	.1	SAFETY WIRE	AR	AR	

a in a roll

INTENTIONALLY LEFT
BLANK

Chapter: 72–10–00
PROPELLER GEAR ASSY., OVERLOAD CLUTCH

TOPICS IN THIS CHAPTER

PROPELLER GEAR ASSY. 2
OVERLOAD CLUTCH, DAMPER CLUTCH 5

PROPELLER GEAR ASSY.

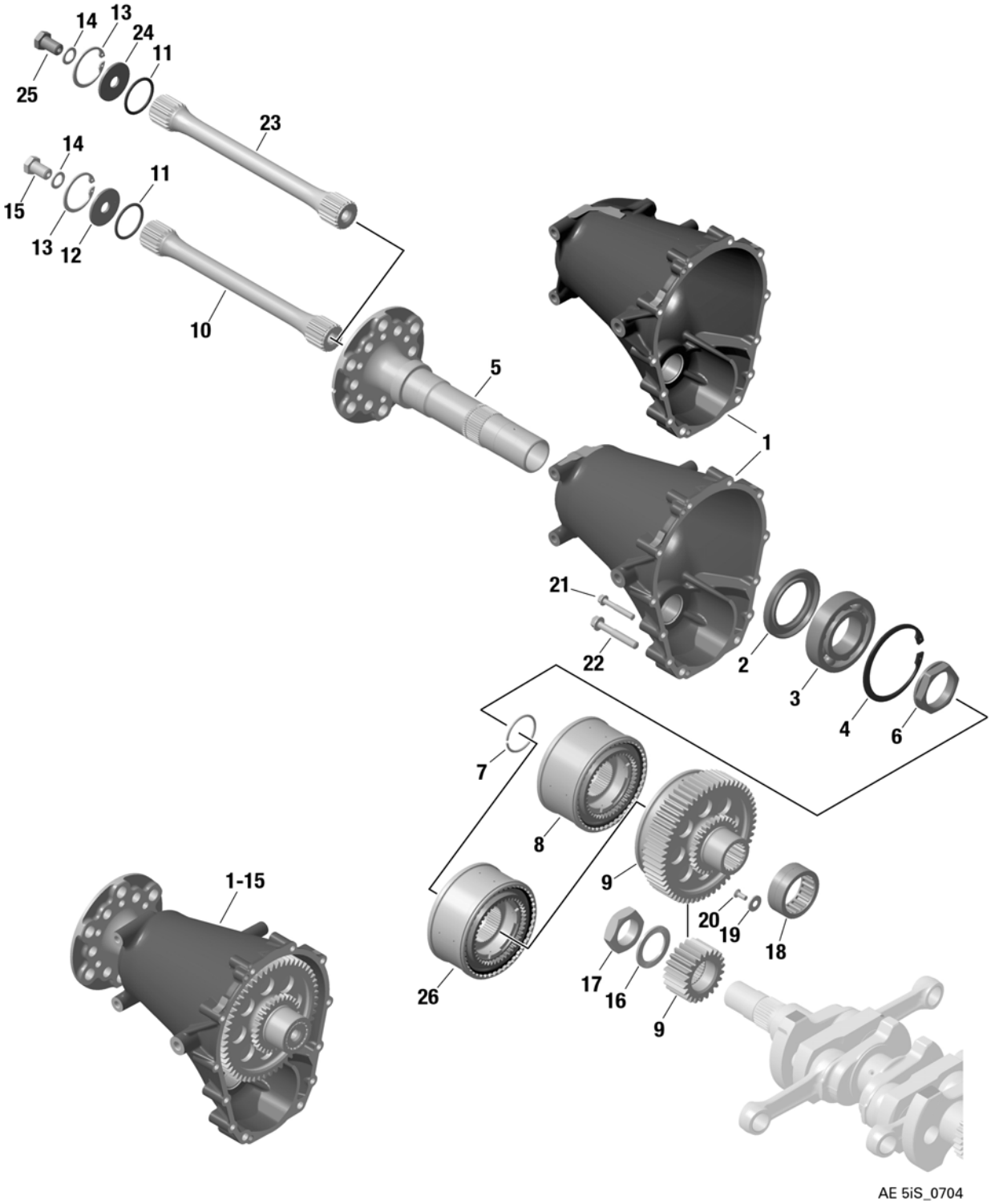

Figure 6.1: Propeller gear assy.

					Parts per Engine		
Item No.	Sta-tus	Part No.	In-dent	Description	915 iS A	915 iSc A	SI-PAC
1-15		686790	.1	PROPELLER GEAR ASSY. CON-FIG. 3	1f	1f	
1	N s.v.	911986 911985	..2	GEARBOX HOUSING ASSY.	1cd	1cd	
2		950091	..2	OIL SEAL AS 48x72x8 FKM	1	1	
3		832060	..2	BALL BEARING 6208 TN9 C3	1	1	
4		845120	..2	RETAINING RING 80x2.85	1	1	
5		837221	..2	PROPELLER SHAFT	1	1	
6		942320	..2	COLLAR NUT M40x1.5 LH	1	1	
7		245935	..2	RETAINING RING A 38	1	1	
8		958418	..2	DAMPER CLUTCH ASSY.	1	1	
9	N s.v.	958413 958412	..2	OVERLOAD CLUTCH ASSY. 56 T	1d	1d	
10		837200	..2	TORSION SHAFT	1	1	
11		230915	..2	O-RING 33x3-N, FPM 75	1	1	
12		827470	..2	SEALING WASHER 40x12.1x2.5	1e	1e	
13		945880	..2	RETAINING RING 40x1.75	1	1	
14	N s.v.	250646 250640	..2	SEALING RING A12x18	1	1	
15	N s.v.	841155 841150	..2	HEX. SCREW M12x20 A2-70	1e	1e	
16		845431	.1	FRICTION WASHER VS30	1	1	
17		842579	.1	HEX. NUT M30x1.5 12 MM, LH	1	1	
18		xxx	.1	NEEDLE BEARING RNA 49/32 see chap. 61-20-00	1	1	
19		xxx	.1	THRUST WASHER 22/27.5/2.3 see chap. 61-20-00	1	1	
20		xxx	.1	COUNTERSUNK SCREW M5x12 see chap. 61-20-00	1	1	
21		440282	.1	HEX. / TORX-FLANGE SCREW M6x40-SW8/T30	10	10	
22		940077	.1	HEX. / TORX-FLANGE SCREW M8x45–SW10/T40	2	2	
23		837201	.1	TORSION SHAFT	1ade	1ade	

					Parts per Engine		
Item No.	**Sta-tus**	**Part No.**	**In-dent**	**Description**	**915 iS A**	**915 iSc A**	**SI-PAC**
24		827472	.1	SEALING WASHER 40x12.1x2.5	1ade	1ade	
25		841153	.1	HEX. SCREW M12x20	1ade	1ade	
26		958419	.1	DAMPER CLUTCH ASSY.	1bd	1bd	

a Configuration 2

b Weight optimized, 5 mm shorter

c Attachment points changed, 2 additional attachment points

d First introduced with configuration 2

e 841153 or 841155 must be assembled together with 827472 and 837201
841150 must be assembled with 827470

f Configuration 3

OVERLOAD CLUTCH, DAMPER CLUTCH

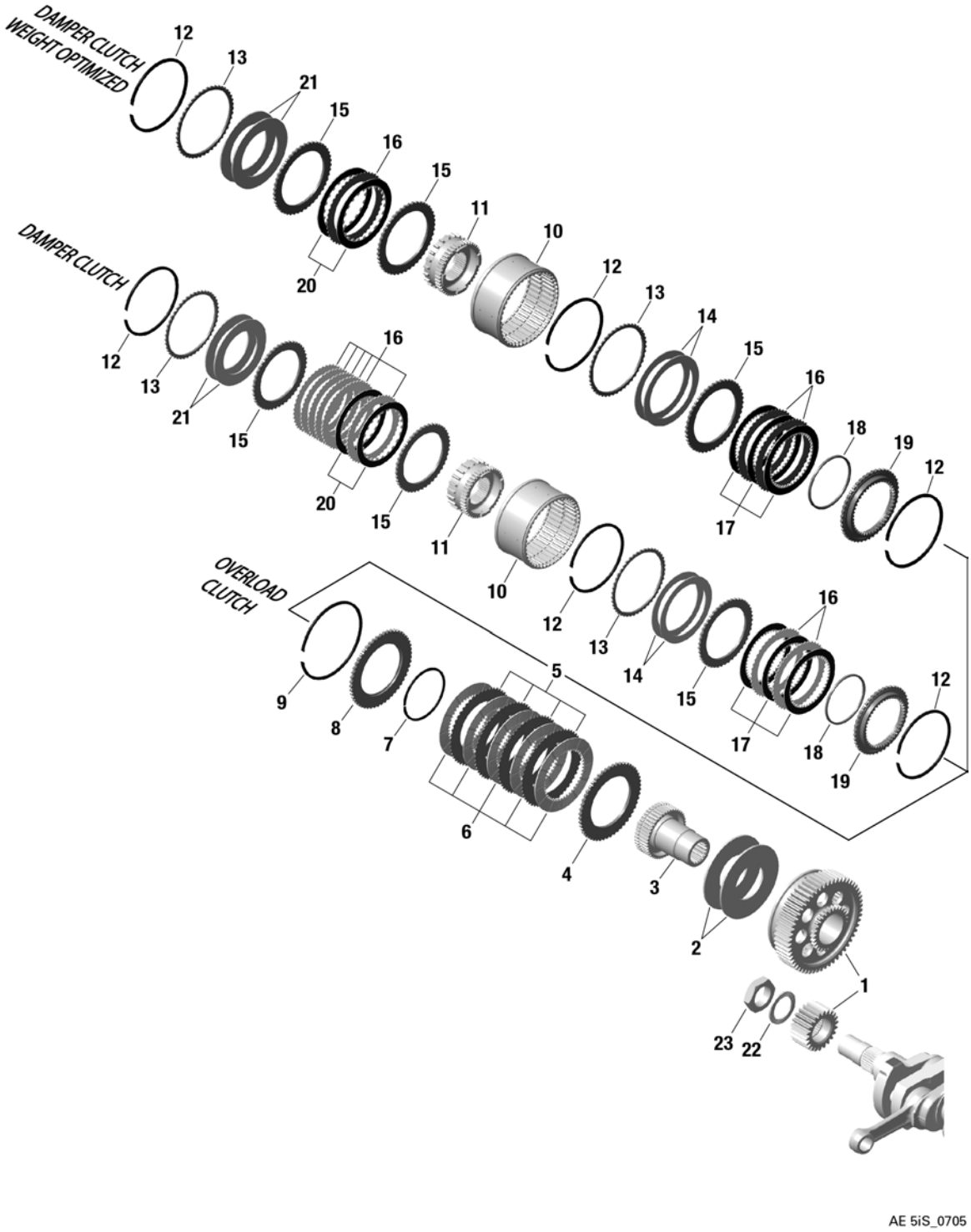

Figure 6.2

					Parts per Engine		
Item No.	Sta-tus	Part No.	In-dent	Description	915 iS A	915 iSc A	SI-PAC
1-9	N s.v.	958413 958412	.1	OVERLOAD CLUTCH ASSY.	1b 1	1b 1	
1	N s.v.	886546 886544	..2	GEAR SET	1bc 1	1bc 1	
2		938092	..2	DISK SPRING 102x49x2.8	2	2	
3	N s.v.	837232 837231	..2	INTERMEDIATE SHAFT	1bd 1	1bd 1	
4		958400	..2	STEEL FRICTION PLATE 4.0 MM	1	1	
5		958160	..2	STEEL FRICTION PLATE 1.0 MM	4	4	
6	N s.v.	958176 958174	..2	SINTER FRICTION PLATE 1.8 MM	5	5	
7		945080	..2	CIRCLIP SW 68	1	1	
8		958402	..2	STEEL FRICTION PLATE 4.0 MM	1	1	
9		945075	..2	CIRCLIP SB 105	1	1	
10-21		958419	.1	DAMPER CLUTCH ASSY.	1ab	1ab	
10-21		958418	.1	DAMPER CLUTCH ASSY.	1	1	
10		958043 958042	..2	CLUTCH DRUM ASSY.	1ab 1	1ab 1	
11		958023	..2	CLUTCH HUB	1ab	1ab	
11		958022	..2	CLUTCH HUB	1	1	
12		945070	..2	CIRCLIP SB 93	3	3	
13		927021	..2	SUPPORT RING	2	2	
14		938098	..2	DISK SPRING 91.5X71X1.5	2	2	
15		959420	..2	STEEL FRICTION PLATE 3.0 MM	3	3	
16	N n.a.	958932 958931	..2	STEEL FRICTION PLATE 1.0 MM	8 3a	8 3a	
17	N s.v.	958993 958991	..2	FRICTION PLATE 1.54 MM	3	3	
18		847895	..2	SPACER RING 69/64.1/3.0	1	1	
19	N n.a.	958103 958102	..2	DRIVING COLLAR	1	1	
20	N s.v.	958994 958992	..2	FRICTION PLATE 1.54 MM	2	2	

					Parts per Engine		
Item No.	**Sta-tus**	**Part No.**	**In-dent**	**Description**	**915 iS A**	**915 iSc A**	**SI-PAC**
21		938099	..2	DISK SPRING 91.5X60X2.1	2	2	
22		845431	..2	FRICTION WASHER VS30	1	1	
23		842579	..2	HEX. NUT M30x1.5 12 MM, LH	1	1	

a Weight optimized, 5 mm shorter, 5 steel friction plates less

b First introduced with configuration 2

c With reduced backlash of gear

d Oil bore for friction discs

INTENTIONALLY LEFT
BLANK

Chapter: 72–20–00
CRANKCASE, CRANKSHAFT, PISTON, CYLINDER, SPRAG CLUTCH, CAMSHAFT, VALVE TRAIN, CYLINDER HEAD, VALVE COVER

TOPICS IN THIS CHAPTER

CRANKCASE 2
CRANKSHAFT, PISTON, CYLINDER, SPRAG CLUTCH 4
CAMSHAFT, VALVE TRAIN, CYLINDER HEAD, VALVE COVER 6

CRANKCASE

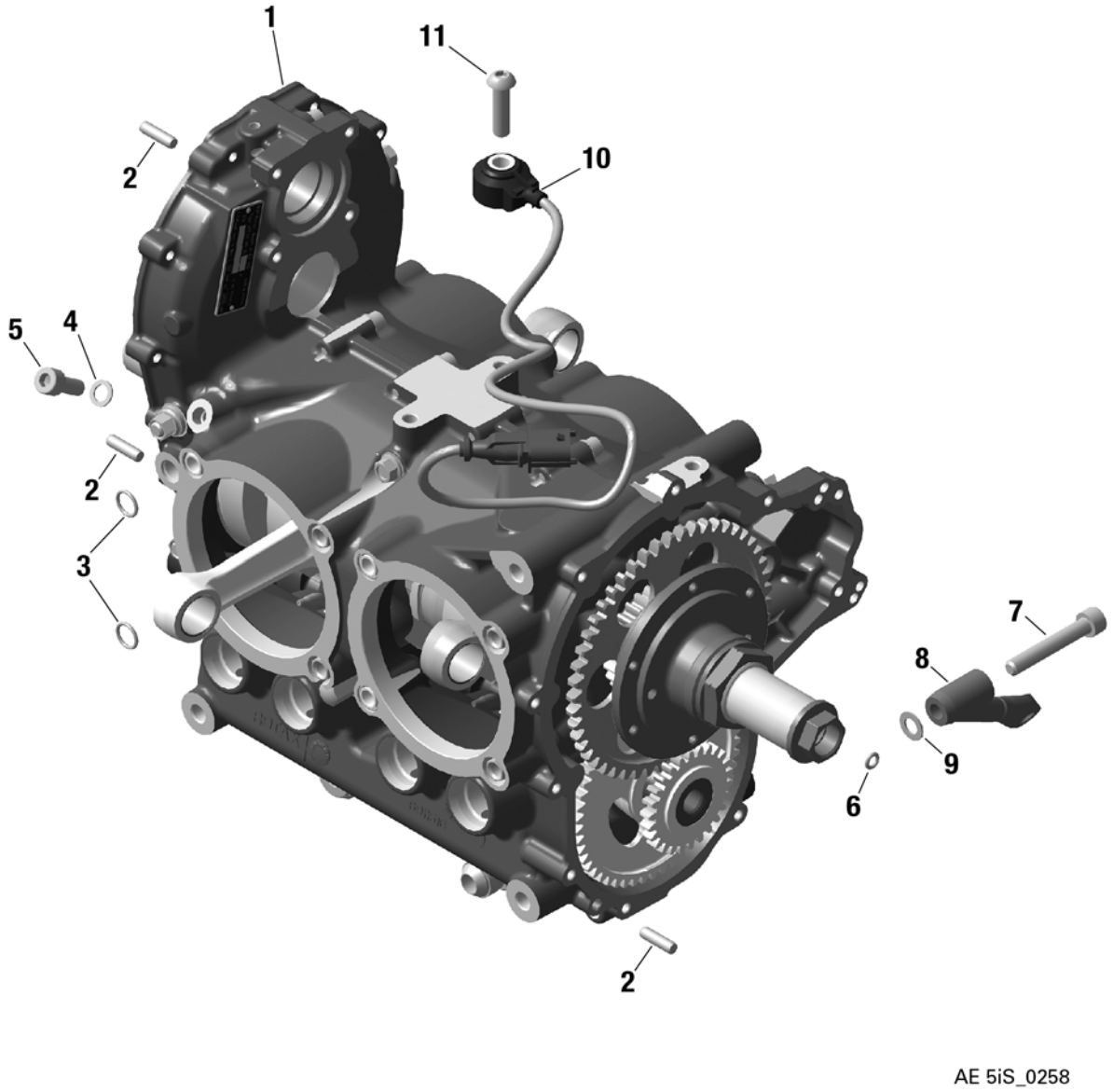

Figure 7.1: 72–20–00

					Parts per Engine		
Item No.	**Sta-tus**	**Part No.**	**Indent**	**Description**	**915 iS A**	**915 iSc A**	**SI-PAC**
1		300091501	.1	ENGINE BLOCK	1a	1a	
2		429230	.1	DOWEL 6x20	2	2	
3		431570	.1	O-RING 10.82Xx1.78-N, FPM 70	8	8	
4		950141	.1	SEALING RING A 8x13	1	1	
5		240071	.1	ALLEN SCREW M8x20	1	1	
6		831929	.1	O-RING 5x2	1	1	
7		440107	.1	ALLEN SCREW M8x50	1	1	
8		xxx	.1	MANIFOLD BRACKET ASSY. see chap. 78-10-00	1	1	
9		xxx	.1	WASHER 8.4/15.1 see chap. 78-10-00	1	1	
10		866270	.1	KNOCK SENSOR	1	1	
11		570661	.1	BINDING HEAD SCREW M8x30	1	1	

a with crankshaft, freewheel

CRANKSHAFT, PISTON, CYLINDER, SPRAG CLUTCH

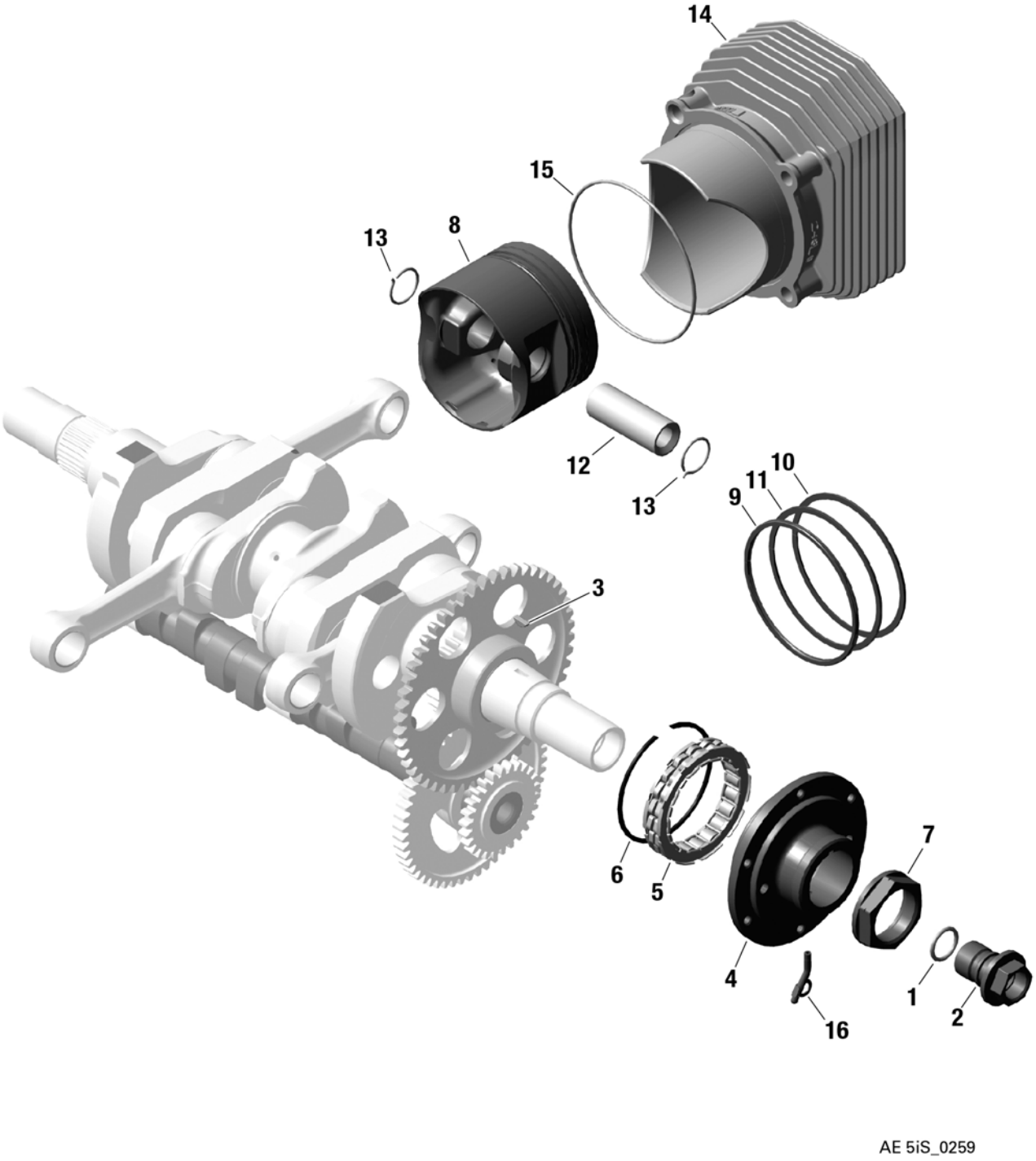

Figure 7.2: 72-20-00

					Parts per Engine		
Item No.	**Sta-tus**	**Part No.**	**In-dent**	**Description**	**915 iS A**	**915 iSc A**	**SI-PAC**
1		430225	.1	O-RING 9X2,3-N, FPM 75	1	1	
2		940526	.1	PLUG SCREW M20X1.5	1	1	
3		246055	.1	WOODRUFF KEY 3x3.7	1	1	
4	N s.v.	852408 852407	.1	SPRAG CLUTCH HOUSING	1a	1a	
5		958856	.1	SPRAG CLUTCH 51.710x68,377x13	1	1	
6		845425	.1	CIRCLIP 70	1	1	
7		942250	.1	HEX. NUT M32x1.5 - LH	1	1	
8		893926	.1	PISTON ASSY. 84/84.01 MM	4	4	
9		815230	.1	OIL SCRAPER RING 84/76.5x3	4	4	
10		815251	.1	RECTANGULAR RING 84/77x1.5	4	4	
11		815280	.1	TAPERED COMPRESSION RING 84	4	4	
12		916380	.1	PISTON PIN 20x12x51.3	4	4	
13		845106	.1	MONOHOOK CIRCLIP 20	8	8	
14		913228	.1	CYLINDER	4	4	
15		250510	.1	O-RING 87x2-N, FPM 75	4	4	
16		456540	.1	OIL SPRAY NOZZLE	1a	1a	

a Part no. 852408 with oil spray nozzle part no. 456540

CAMSHAFT, VALVE TRAIN, CYLINDER HEAD, VALVE COVER

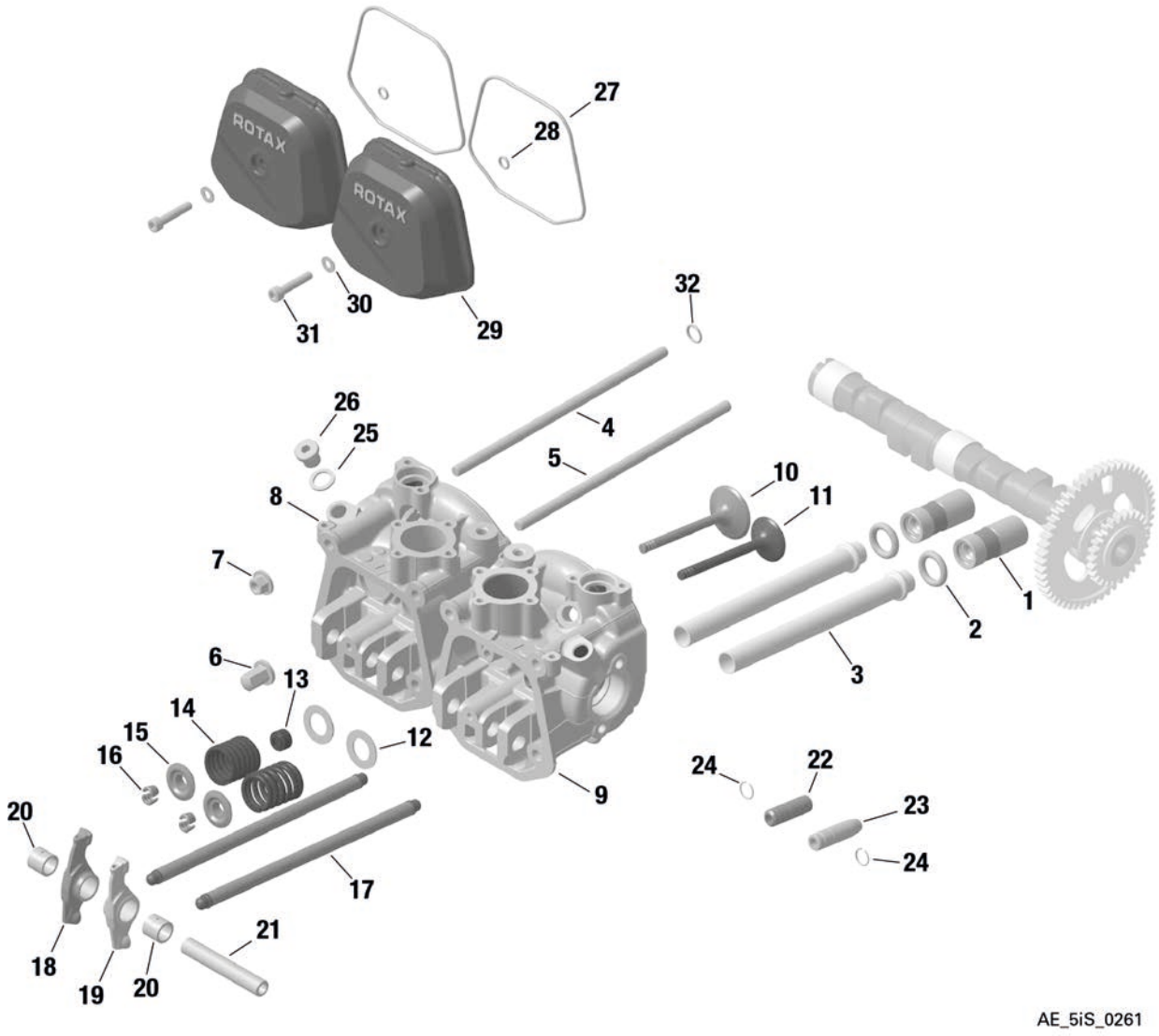

Figure 7.3: 72–20–00

					Parts per Engine		
Item No.	Sta-tus	Part No.	In-dent	Description	915 iS A	915 iSc A	SI-PAC
1		881832	.1	HYDRAULIC VALVE TAP-PET SET	1	1	
1	n.a.	854097	..2	HYDRAULIC VALVE TAPPET	8	8	
2		850930	.1	O-RING 16x5	8	8	
3		924440	.1	OIL RETURN TUBE	8	8	
4		840171	.1	STUD M8x200	8	8	
5		840141	.1	STUD M8x186	8	8	
6		842476	.1	COLLAR CAP NUT M8	8	8	
7		942302	.1	COLLAR NUT M8	8	8	
8	N s.v.	623779 623777	.1	CYLINDER HEAD 2/3 ASSY.	2	2	
9	N s.v.	623789 623787	.1	CYLINDER HEAD 1/4 ASSY.	2	2	
10		854101	.1	INTAKE VALVE 38 MM	4	4	
11		854113	.1	EXHAUST VALVE 32 MM	4	4	
12		926210	.1	SHIM 16/27.4/1	8	8	
13		230810	.1	VALVE STEM SEAL	4	4	
14		838156	.1	VALVE SPRING	8	8	
15		854186	.1	VALVE SPRING RETAINER	8	8	
16		253092	.1	VALVE COTTER	16	16	
17		854861	.1	VALVE PUSH-ROD ASSY.	8	8	
18		854383	.1	ROCKER ARM LEFT	4	4	
19		854393	.1	ROCKER ARM RIGHT	4	4	
20		933396	.1	BUSHING	8	8	
21		854193	.1	ROCKER ARM SHAFT	4	4	
22		854225	.1	VALVE GUIDE	4	4	
23		253114	.1	INLET VALVE GUIDE	4	4	
24		245440	.1	RETAINING RING A12	8	8	
25	N s.v.	250016 250015	.1	SEALING RING A12x18	3	3	
26		841923	.1	PLUG SCREW M12x1.5	3	3	
27		250285	.1	O-RING 105x2.5	4	4	

					Parts per Engine		
Item No.	**Sta-tus**	**Part No.**	**In-dent**	**Description**	**915 iS A**	**915 iSc A**	**SI-PAC**
28		430205	.1	O-RING 6.4x1.8	4	4	
29		612265	.1	VALVE COVER SKY BLUE	4	4	
30		927941	.1	WASHER 6.0/12/1	4	4	
31		840887	.1	ALLEN SCREW ISO 4762 M6x30 10.9	4	4	
32		431570	.1	O-RING 10.82x1.78–N, FPM 70	8	8	
33		881920	.1	O-RING SET	1a	1a	

a consists of 4x 430205 and 4x 250285

Chapter: 73–10–00
INTAKE MANIFOLD, AIRBOX, THROTTLE BODY SOCKET, INTERCOOLER, WASTEGATE, FUEL INJECTOR, FUEL RAIL, PRESSURE REGULATOR, FUEL RAIL COVER, FUEL PUMP ASSY.

TOPICS IN THIS CHAPTER

INTAKE MANIFOLD, AIRBOX, THROTTLE BODY SOCKET 2
INTERCOOLER, WASTEGATE 5
FUEL INJECTOR, FUEL RAIL, PRESSURE REGULATOR, FUEL RAIL COVER 8
FUEL PUMP ASSY. 12

INTAKE MANIFOLD, AIRBOX, THROTTLE BODY SOCKET

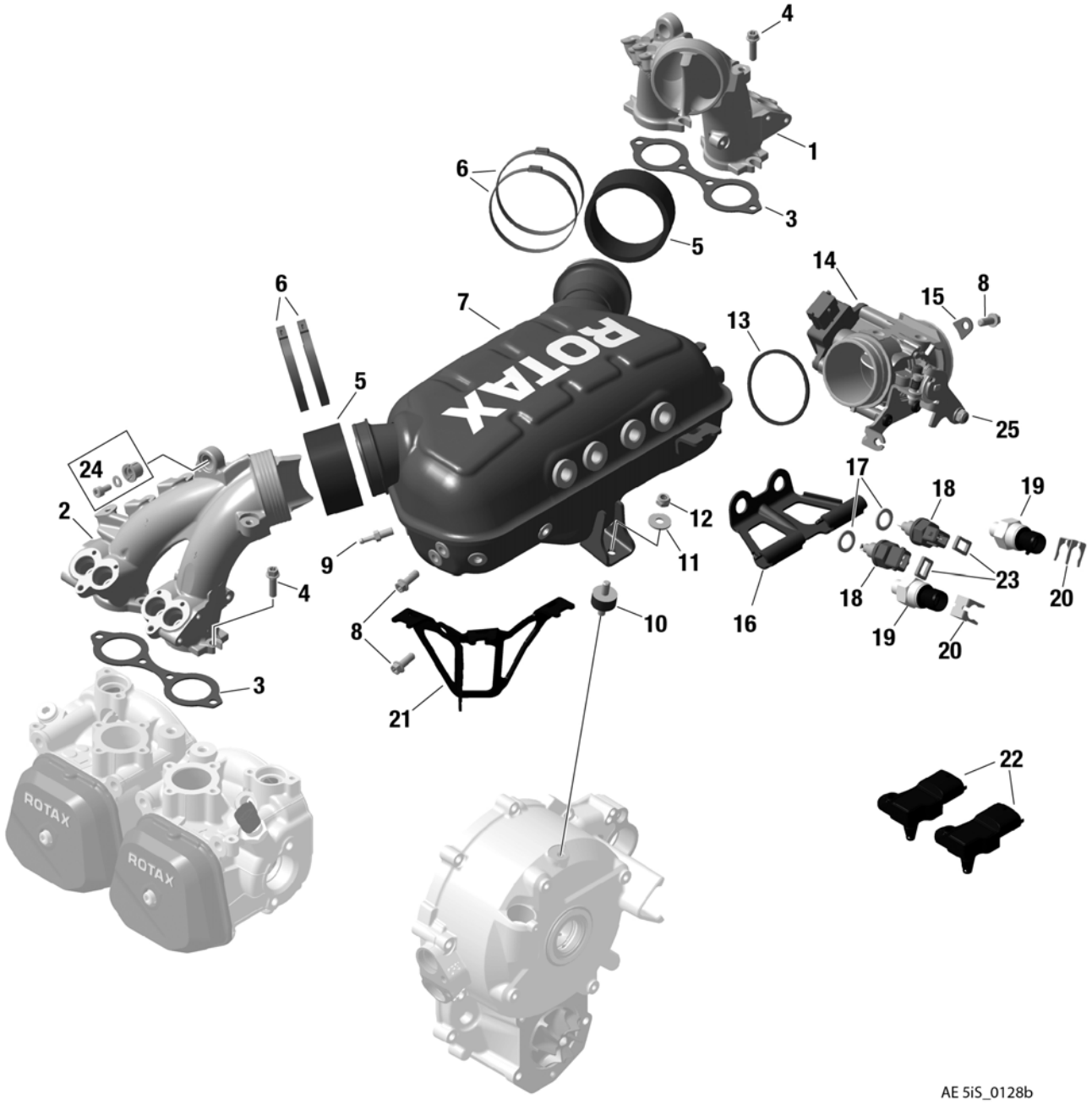

Figure 8.1: 73–10–00

					Parts per Engine		
Item No.	**Status**	**Part No.**	**In-dent**	**Description**	**915 iS A**	**915 iSc A**	**SI-PAC**
1		667401	.1	INTAKE MANIFOLD 1/3	1	1	
2		667406	.1	INTAKE MANIFOLD 2/4	1	1	
3		850091	.1	ISOLATING FLANGE	2	2	
4		440207	.1	HEX./TORX-FLANGE SCREW M6x20-SW8/T30	8	8	
5		460421	.1	CONNECTING SOCKET	2	2	
6		953093	.1	1-EAR-CLAMP 66.3-69.5 MM	4	4	
7	N s.v.	667414 667411	.1	AIRBOX	1	1	
8		440164	.1	HEX./TORX-FLANGE SCREW M6X16-SW8/T30	5	5	
9		840672	.1	HOSE NIPPLE M6	1	1	
10		860700	.1	RUBBER 20x10xM6	1	1	
11		827968	.1	WASHER 6.4	1	1	
12		842044	.1	LOCK NUT M6	1	1	
13		850020	.1	RUBBER RING	1	1	
14	N s.v.	685056 685055	.1	THROTTLE BODY SOCKET ASSY.	1	1	
15		953020	.1	SEPARATING PLATE	3	3	
16		651780	.1	CONNECTOR BRACKET	1	1	
17	N s.v.	250016 250015	.1	SEALING RING A12x18	2	2	
18		222421	.1	TEMPERATURE SENSOR	2	2	
19		664364	.1	PRESSURE SENSOR 2.0	2	2	
20		638140	.1	CLIP	2	2	
21	N s.v.	951564 951562	.1	CONNECTOR BRACKET	1	1	
22		874654	.1	PRESSURE-/TEMP. SENSOR	2a	2a	
23		850610	.1	CONNECTOR GASKET	2	2	
24		481485	.1	GOVERNOR CABLE KIT NC			003
25		440000	.1	FIXING SCREW ASSY.	1b	1b	

a Ambient pressure and temperature

b Screw, nut and washers

INTERCOOLER, WASTEGATE

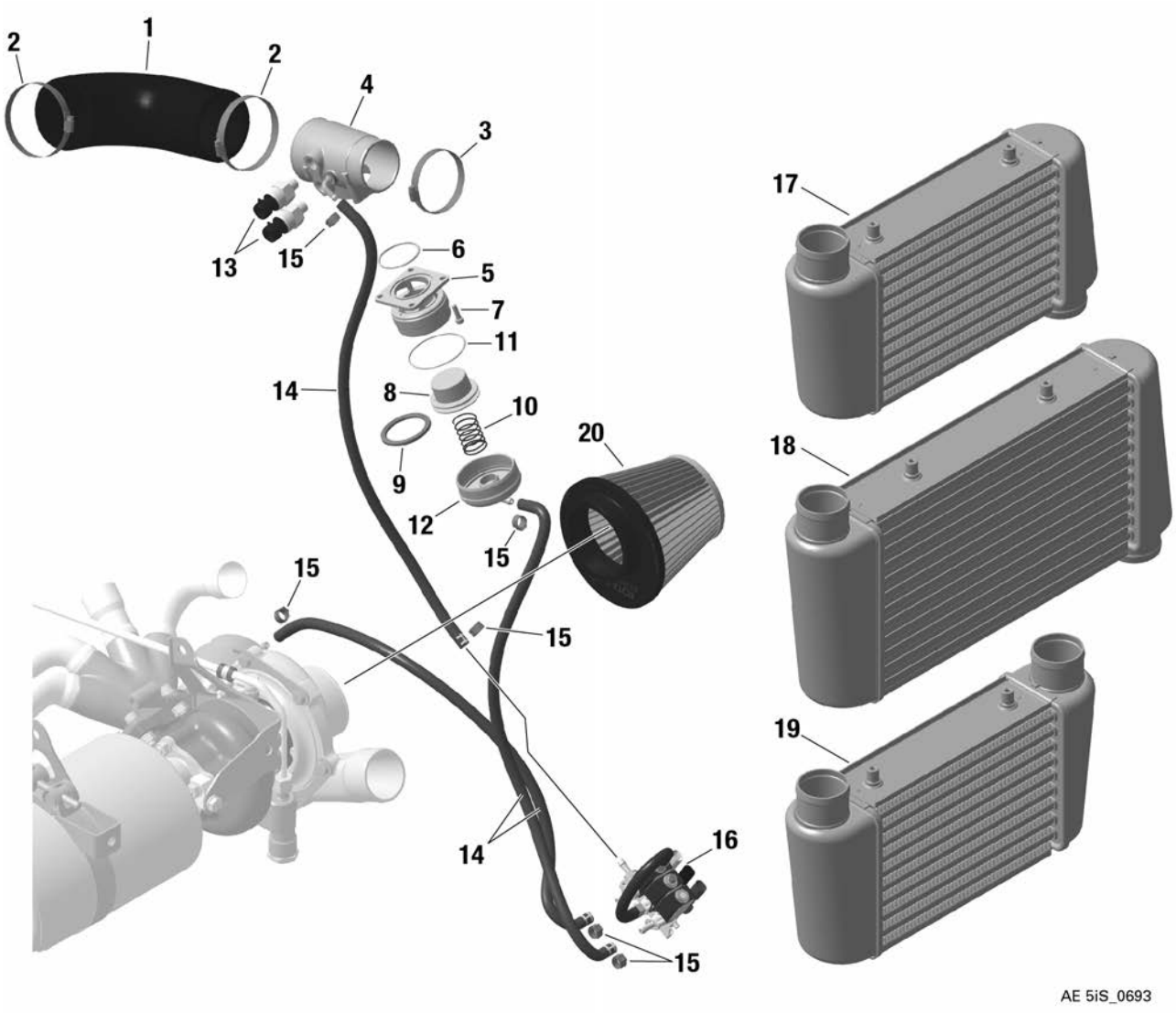

Figure 8.2: 73-10-00

					Parts per Engine		
Item No.	**Sta-tus**	**Part No.**	**In-dent**	**Description**	**915 iS A**	**915 iSc A**	**SI-PAC**
1		201015	.1	AIR INTAKE HOSE	1	1	
2		951791	.1	CLAMP 50-70	2	2	
3		853381	.1	CLAMP 40-60	4	4	005
4-12		481540	.1	POP OFF VALVE ASSY.	1	1	
4	N	947785	..2	REDUCTION SLEEVE ASSY.	1c	1c	
5		812382	..2	VALVE HOUSING	1	1	
6		431740	..2	O-RING 38x2.4-N, VITON GLT 70	1	1	
7	N n.a.	840514 840511	..2	ALLEN SCREW M5x16	4	4	
8		667196	..2	VALVE PISTON	1	1	
9		631333	..2	LIP SEAL 50-42-4.5	1	1	
10		838372	..2	COMPRESSION SPRING DM22 D1.5 L65	1	1	
11		450390	..2	O-RING 54x2-N, FPM	1	1	
12	N	812395	..2	VALVE COVER ASSY.	1c	1c	
13		664364	.1	PRESSURE SENSOR 2.0	2	2	
14	N	874338	.1	CONTROL HOSE 600 MM	3b	3b	
14	N s.v.	874334 874333	.1	FUEL HOSE 6x11	ARb	ARb	
15	N s.v.	851468	.1	CLAMP 10.3 – 12.8	6	6	
16		664638	.1	SOLENOID VALVE	1	1	
17		888962	.1	INTERCOOLER	1a	1a	005
18		888963	.1	INTERCOOLER NC	1	1	005
19		888965	.1	INTERCOOLER NC	1	1	005
20		825900	.1	AIRFILTER NC	1	1	006

a standard, see Installation Manual

b fuel hose in a roll, control hose 3 pcs. with 600 mm

c with impulse elbow integrated

FUEL INJECTOR, FUEL RAIL, PRESSURE REGULATOR, FUEL RAIL COVER

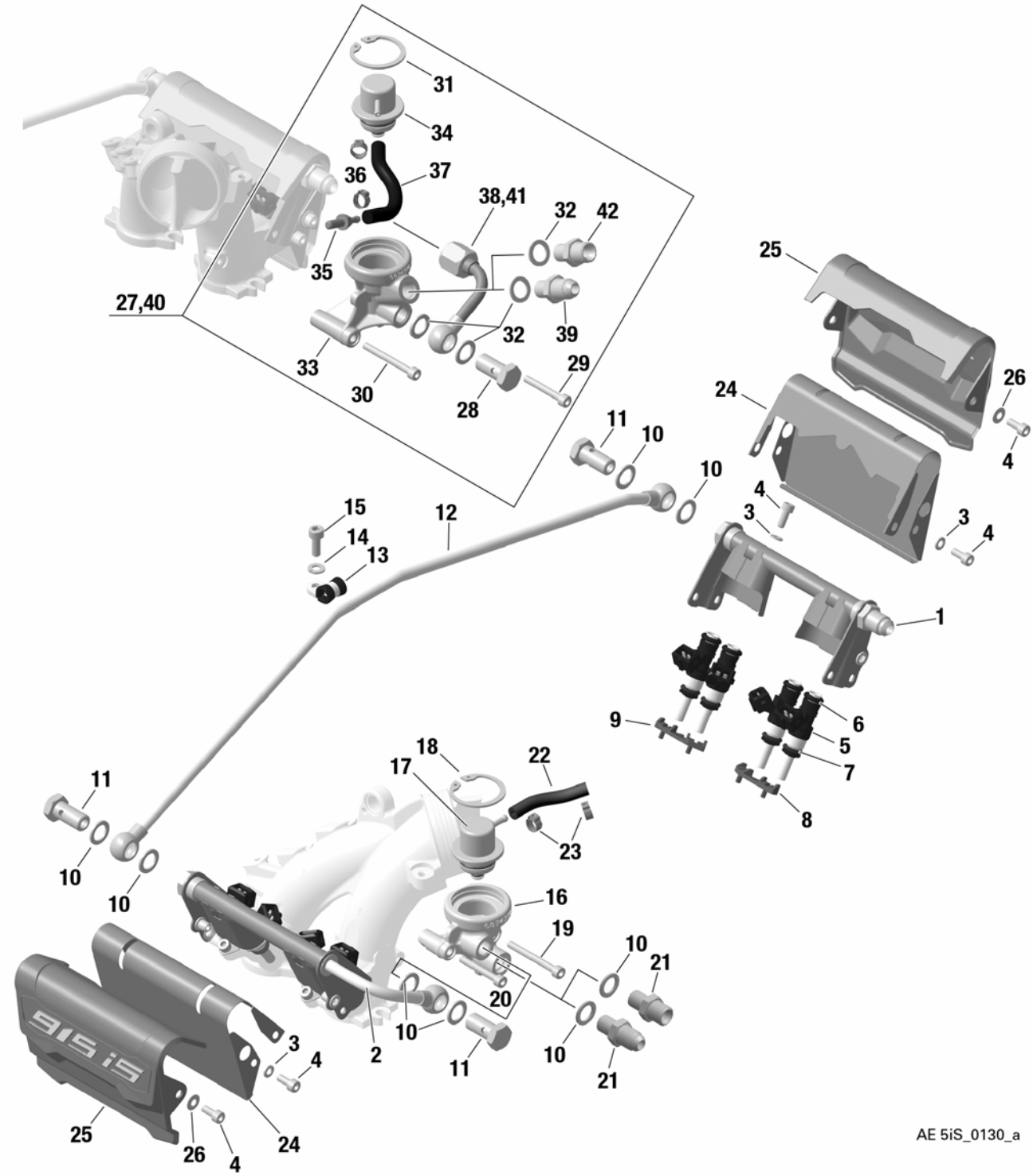

Figure 8.3: 73–10–00

					Parts per Engine		
Item No.	**Sta-tus**	**Part No.**	**In-dent**	**Description**	**915 iS A**	**915 iSc A**	**SI-PAC**
1		874795	.1	FUEL RAIL 1/3 (RIGHT)	1	1	
2		874797	.1	FUEL RAIL 2/4 (LEFT)	1	1	
3		945750	.1	LOCK WASHER A5	11	11	
4	N n.a.	640542 640541	.1	ALLEN SCREW M5x12	11	11	
5–7		874780	.1	FUEL INJECTOR	8	8	
6		831060	..2	O-RING 7.52x3.51	8	8	
7		831050	..2	O-RING 8.54x3.1 VITON B70	8	8	
8		860042	.1	DAMPER LEFT	2	2	
9		860040	.1	DAMPER RIGHT	2	2	
10	N s.v.	250646 250640	.1	SEALING RING A 12x18-CU	7	7	
11	N n.a.	641543 641541	.1	BANJO BOLT	3	3	
12		874802	.1	FUEL LINE ASSY.	1	1	
13		853412	.1	CABLE CLAMP	1	1	
14	N s.v.	945831 945751	.1	LOCK WASHER A6	1	1	
15		241239	.1	ALLEN SCREW M6x16	1	1	
16		874770	.1	PRESSURE REGULATOR HOUSING	1	1	
17		889262	.1	FUEL PRESSURE REGULATOR ASSY.	1	1	
18		845650	.1	RETAINING RING 36x1,5	1	1	
19	N s.v.	941792 941791	.1	ALLEN SCREW M5x45	1	1	
20	N n.a.	841502 841501	.1	ALLEN SCREW M5x35	1	1	
21		840700	.1	ADAPTER 9/16 UNF/M12x1.5	1	1	
21		856821	.1	ADAPTER METRIC M14x1.5/ M12x1.5	1	1	
22		960631	.1	TUBE 60 +/-3 MM	1	1	
23		853653	.1	1–EAR-CLAMP	2	2	
24		975090	.1	HEAT SHIELD	2	2	

					Parts per Engine		
Item No.	**Sta-tus**	**Part No.**	**In-dent**	**Description**	**915 iS A**	**915 iSc A**	**SI-PAC**
25		975065	.1	COVERING FUEL RAIL	2	2	
26		939445	.1	SPRING WASHER 12x5.2x0.5	4	4	
27 (28 - 39)		889275	.1	FUEL PRESSURE DAMPER ASSY. UNF NC	1	1	020
28		641541	..2	BANJO BOLT - DIN 7643 - 8 - 3 NC	1	1	
29		841502	..2	ALLEN SCREW ISO 4762 - M5x35 - 8.8 NC	1	1	
30		941792	..2	ALLEN SCREW ISO 4762 - M5x45 - 8.8 NC	1	1	
31		845650	..2	RETAINING RING 36X1.5 NC	1	1	
32		250646	..2	SEALING RING DIN 7603-A 12X18-CU NC	3	3	
33		874775	..2	PRESSURE DAMPER HOUSING NC	1	1	
34		889262	..2	FUEL PRESSURE REGULATOR ASSY. NC	1	1	
35		840675	..2	HOSE NIPPLE M6 NC	1	1	
36		853653	..2	1-EAR-CLAMP 8.3 - 10 MM NC	2	2	
37		960632	..2	TUBE 100 +/-3 MM NC	1	1	
38		874875	..2	FUEL LINE ASSY. 1/3 - UNF NC	1	1	

					Parts per Engine		
Item No.	**Sta-tus**	**Part No.**	**In-dent**	**Description**	**915 iS A**	**915 iSc A**	**SI-PAC**
39		840700	..2	ADAPTER 9/16 UNF/M12x1.5 NC	1	1	
40 (28 - 37, 41, 42)		889277	.1	FUEL PRESSURE DAMPER ASSY. METRIC NC	1	1	020
41		874877	..2	FUEL LINE ASSY. 1/3 - METRIC NC	1	1	
42		856821	..2	ADAPTER M14x1.5/M12x1.5 NC	1	1	

FUEL PUMP ASSY.

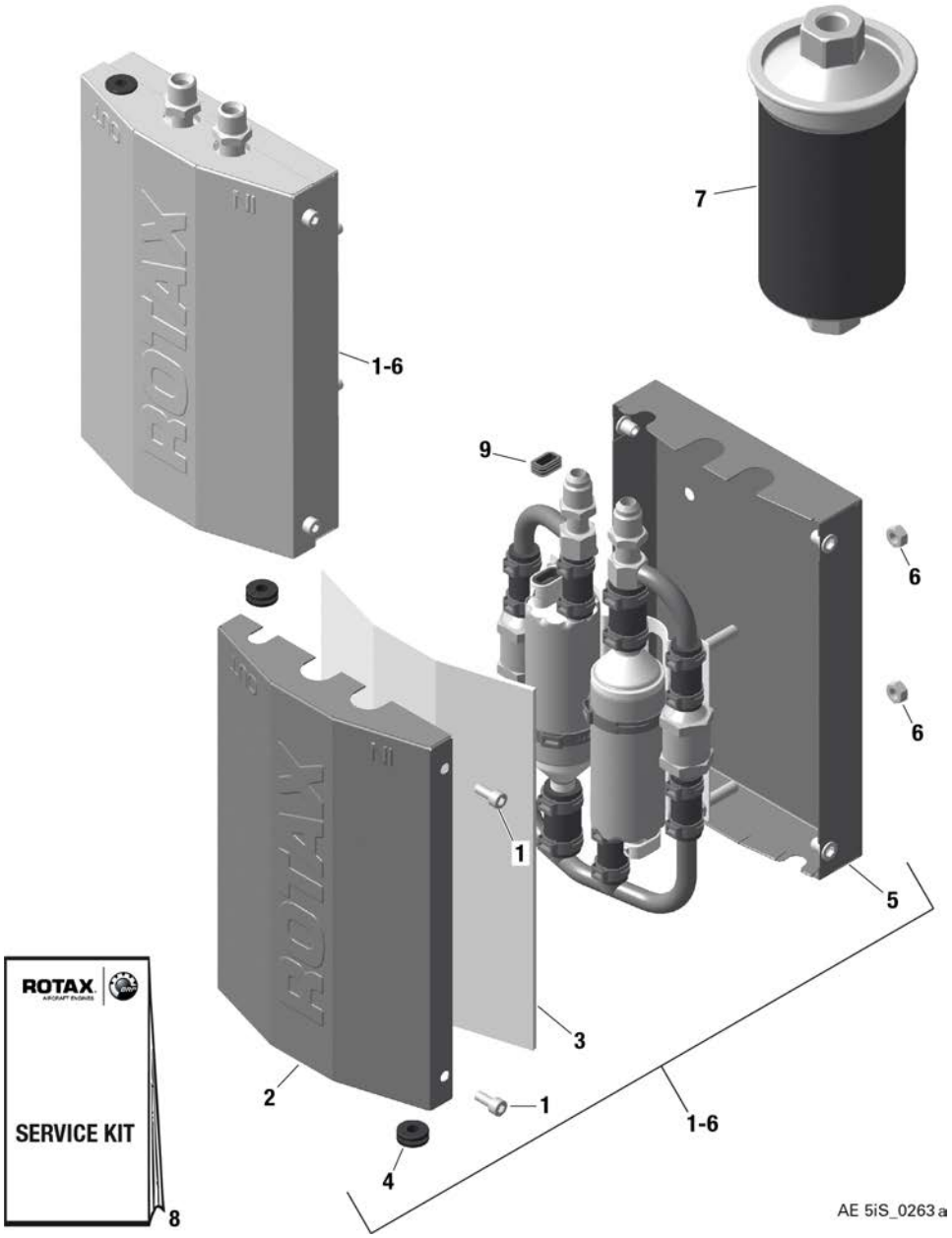

Figure 8.4: 73–10–00

					Parts per Engine		
Item No.	**Sta-tus**	**Part No.**	**In-dent**	**Description**	**915 iS A**	**915 iSc A**	**SI-PAC**
1-6	N	889697	.1	FUEL PUMP ASSY. UNF PACKAGED NC	1ac		016
1-6		889696	..2	FUEL PUMP ASSY. UNF NC	1ac		016
1-6	N	889699	.1	FUEL PUMP ASSY. METRIC PACKAGED NC	1bc		016
1-6		889698	..2	FUEL PUMP ASSY. METRIC NC	1bc		016
1	s.v. N	640541 640542	..2	ALLEN SCREW M5x12 ALLEN SCREW M5x12 NC	4		016
2		911790	..2	COVER NC	1		016
3		975055	..2	HEAT PROTECTION MAT NC	1		016
4		201160	..2	RUBBER GROMMET NC	2		016
5		911700	..2	HOUSING NC	1		016
6		242213	..2	HEX. NUT M6 NC	8		016
7		874060	.1	FUEL FILTER NC	1		007
8		889537	.1	SERVICE KIT NC	1		008
9		xxx	.1	CONNECTOR GASKET see chap. 76-50-00	2		

a Thread 9/16 18 UNF (AN-6)

b Thread M14x1.5

c With gaskets for connectors

Chapter: 74–20–00
IGNITION COILS, IGNITION CABLE, SPARK PLUG CONNECTOR, SPARK PLUG

TOPICS IN THIS CHAPTER

IGNITION COILS, IGNITION CABLE, SPARK PLUG CONNECTOR, SPARK PLUG 2

IGNITION COILS, IGNITION CABLE, SPARK PLUG CONNECTOR, SPARK PLUG

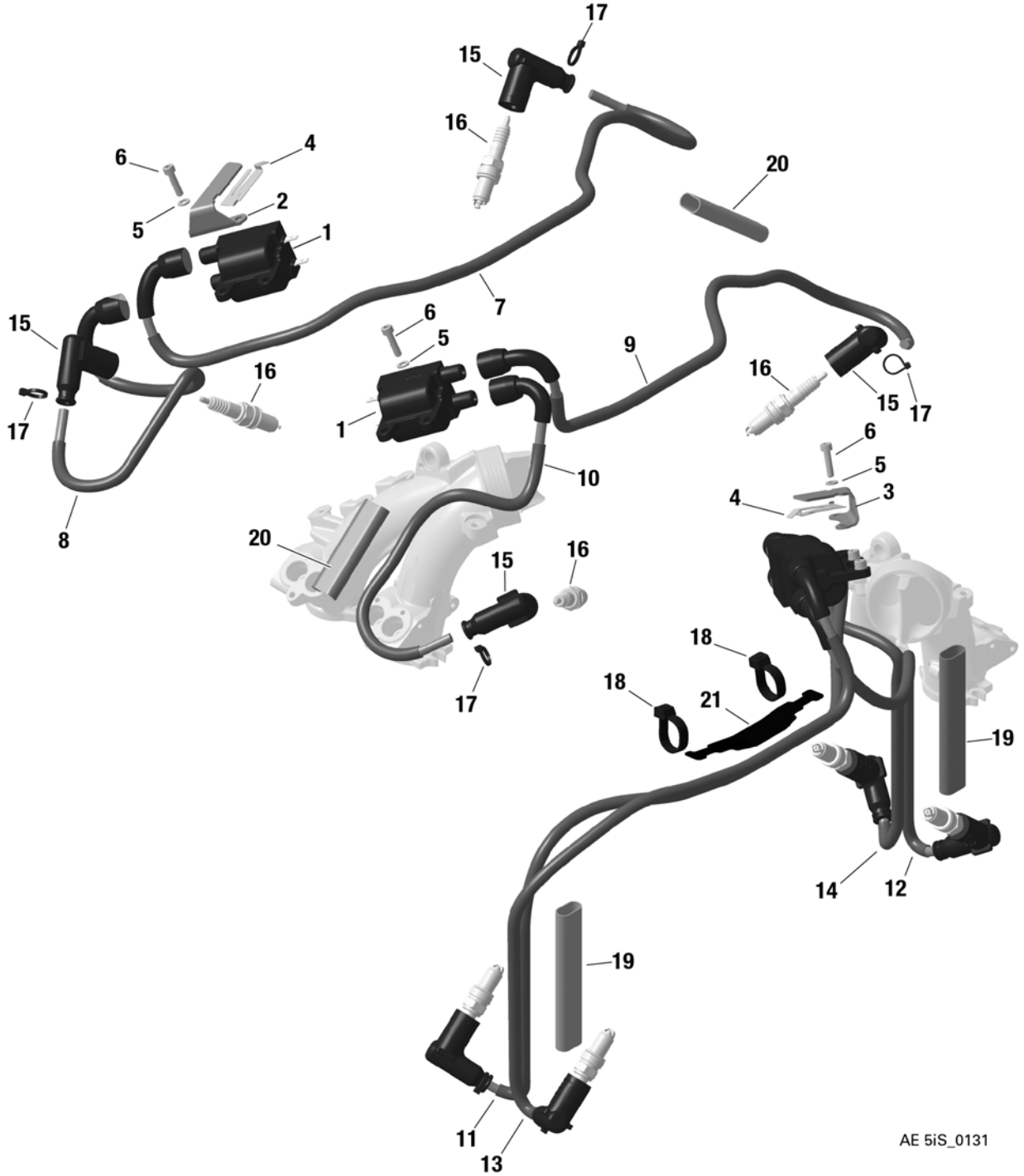

Figure 9.1: 74–20–00

					Parts per Engine		
Item No.	**Status**	**Part No.**	**In-dent**	**Description**	**915 iS A**	**915 iSc A**	**SI-PAC**
1		665613	.1	DOUBLE IGNITION COIL	4	4	
2		951497	.1	CONNECTOR BRACKET	1	1	
3		951496	.1	CONNECTOR BRACKET	1	1	
4		251685	.1	SPRING HOOK	2	2	
5		945750	.1	LOCK WASHER A5	8	8	
6		441341	.1	ALLEN SCREW M5x20	8	8	
7–14		665558	.1	IGNITION CABLE SET	1a	1a	
15		265249	.1	SPARK PLUG CONNECTOR	8	8	
16		297656	.1	SPARK PLUG	8	8	
17		866718	.1	TIE WRAP 94x2.5 MM	8	8	
18		866716	.1	TIE WRAP 203x7.6 MM	2	2	
19		860734	.1	GLASS FIBER-SILICON SHEATH-ING 120	2	2	
20		860736	.1	GLASS FIBER-SILICON SHEATH-ING 75	2	2	
21		651942	.1	PROTECTION SHIELD	1	1	

a Set for double ignition coil with high tension connector Rettich thread included: 8 ignition cable assy., 8 protective cap and 8 glass fiber-silicon sheeting.

INTENTIONALLY LEFT
BLANK

Chapter: 75–20–00
WATER PUMP WITH DRIVE, EXPANSION TANK, COOLING AIR BAFFLE

TOPICS IN THIS CHAPTER

WATER PUMP WITH DRIVE 2
EXPANSION TANK WITH HOSES AND CONNECTIONS 4
COOLING AIR BAFFLE 7

WATER PUMP WITH DRIVE

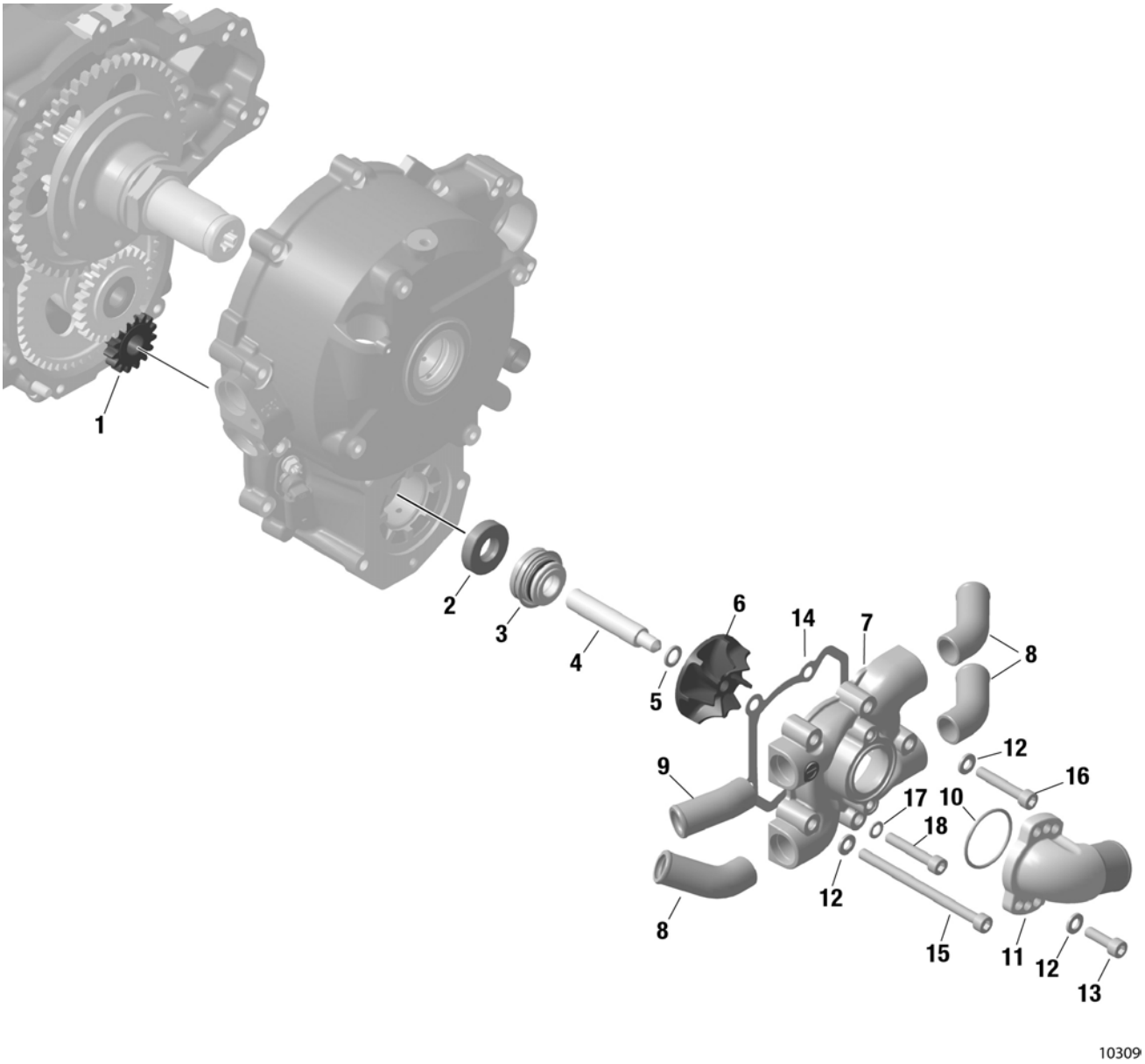

Figure 10.1: 75–20–00

					Parts per Engine		
Item No.	**Sta-tus**	**Part No.**	**In-dent**	**Description**	**915 iS A**	**915 iSc A**	**SI-PAC**
1		834135	.1	WATER PUMP GEAR 15 T	1	1	
2		850977	.1	OIL SEAL A 12x30x7 FPM	1	1	
3		850946	.1	ROTARY SEAL	1	1	
4		837111	.1	PUMP SHAFT	1	1	
5		926274	.1	WASHER 8.2/12.5/1.5	1	1	
6		922224	.1	IMPELLER	1	1	
7		922202	.1	WATER PUMP HOUSING	1	1	
8		922233	.1	BENT SOCKET 45 DEGREES	3	3	
9		922234	.1	BENT SOCKET 20 DEGREES	1	1	
10		230020	.1	O-RING 32x2	1	1	
11		922218	.1	WATER INLET ELBOW	1	1	
12	N s.v.	827962 827961	.1	WASHER 6.4 DIN 125	6	6	
13		241935	.1	ALLEN SCREW M6x20 DIN 912	2	2	
14		850981	.1	GASKET	1	1	
15		241481	.1	ALLEN SCREW M6X90	2	2	
16	N s.v.	241814 241811	.1	ALLEN SCREW M6x35 ISO 4762-8.8	2	2	
17		230415	.1	SEALING RING A 6x10 DIN 7603	1	1	
18		241813	.1	ALLEN SCREW M6x35, STAINLESS	1	1	

EXPANSION TANK WITH HOSES AND CONNECTIONS

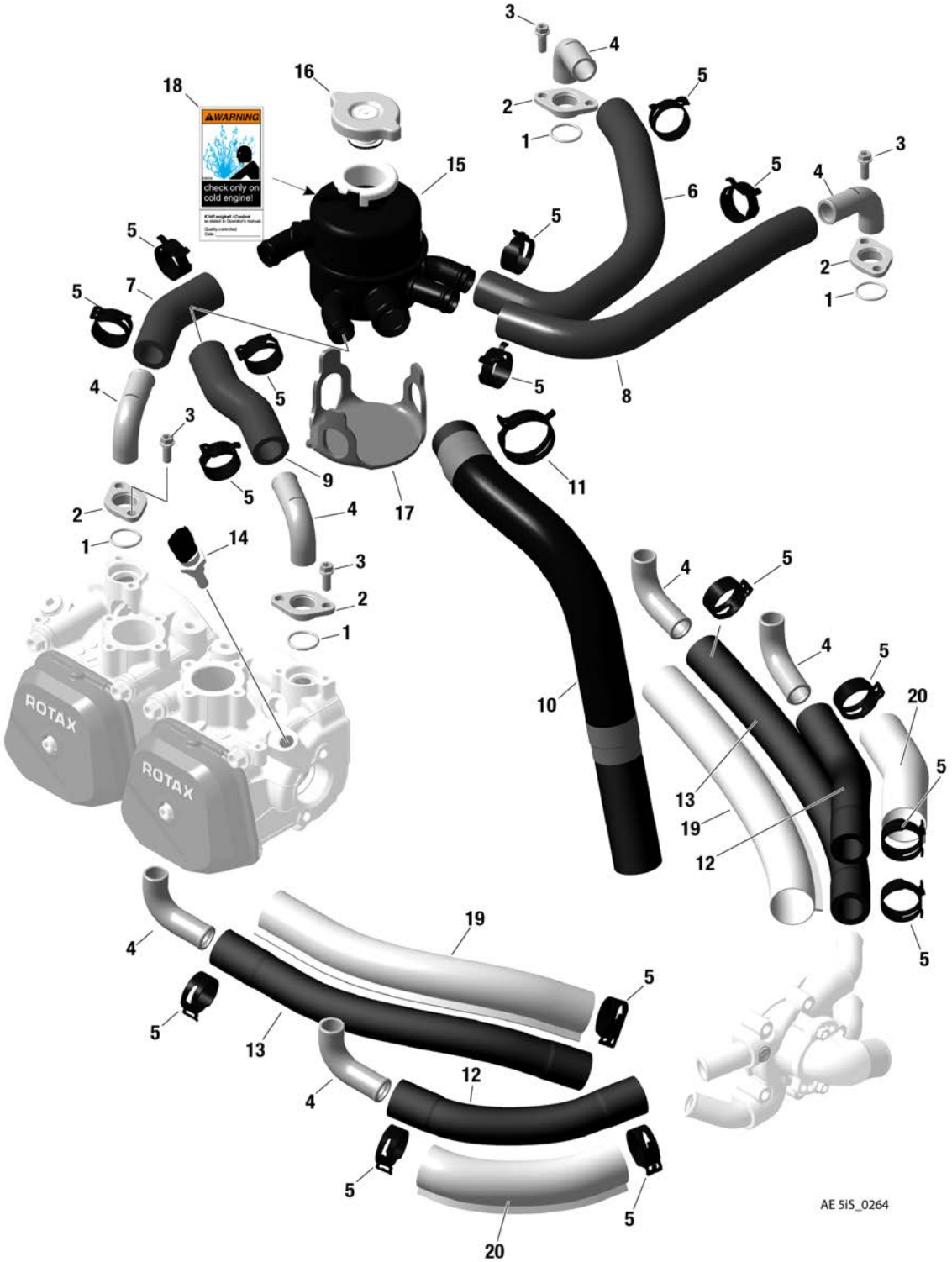

Figure 10.2: 75–20–00

					Parts per Engine		
Item No.	**Status**	**Part No.**	**In-dent**	**Description**	**915 iS A**	**915 iSc A**	**SI-PAC**
1		950180	.1	O-RING 19-2	4	4	
2		922303	.1	FLANGE	4	4	
3		440162	.1	HEX./TORX-FLANGE SCREW M6X16-SW8/T30	8	8	
4	N s.v.	922236 922231	.1	BENT SOCKET 80 DEGREES	8	8	
5		851645	.1	CLAMP 25	16e	16e	
5		851641	.1	CLAMP 26	16d	16d	
6		822422	.1	FORM HOSE 1	(1a)	(1a)	
6		822420	.1	FORM HOSE 1	1b	1b	
7		822432	.1	FORM HOSE 2	(1a)	(1a)	
7		822430	.1	FORM HOSE 2	1b	1b	
8		822442	.1	FORM HOSE 3	(1a)	(1a)	
8		822440	.1	FORM HOSE 3	1b	1b	
9		822447	.1	FORM HOSE 4	(1a)	(1a)	
9		822445	.1	FORM HOSE 4	1b	1b	
10		822450	.1	FORM HOSE	1b	1b	
10		822452	.1	FORM HOSE	(1a)	(1a)	
11		951350	.1	CLAMP 35	1	1	
12		922366	.1	WATER TUBE 180 +/-3 MM	(2a)	(2a)	
12		922360	.1	WATER TUBE 180 +/-3 MM	2b	2b	
13		922367	.1	WATER TUBE 280 +/-3 MM	(2a)	(2a)	
13		922362		WATER TUBE 280 +/-3 MM	2b	2b	
14		965537	.1	TEMPERATURE SENSOR	1	1	
15-18		922664	.1	EXPANSION TANK ASSY.	1	1	
16		922072	..2	RADIATOR CAP WITH GASKET 1.2 BAR/17.4 PSI	1	1	
17		860828	..2	RUBBER PLATE	1	1	
18		897506	..2	WARNING LABEL	2	2	
19		860650	.1	PROTECTION TUBE 240 MM	ARc	ARc	
20		860650	.1	PROTECTION TUBE 140 MM	ARc	ARc	

a Silicone

b Standard EPDM, change every 5 years

c In a roll

d For silicone hoses

e For standard rubber hoses

COOLING AIR BAFFLE

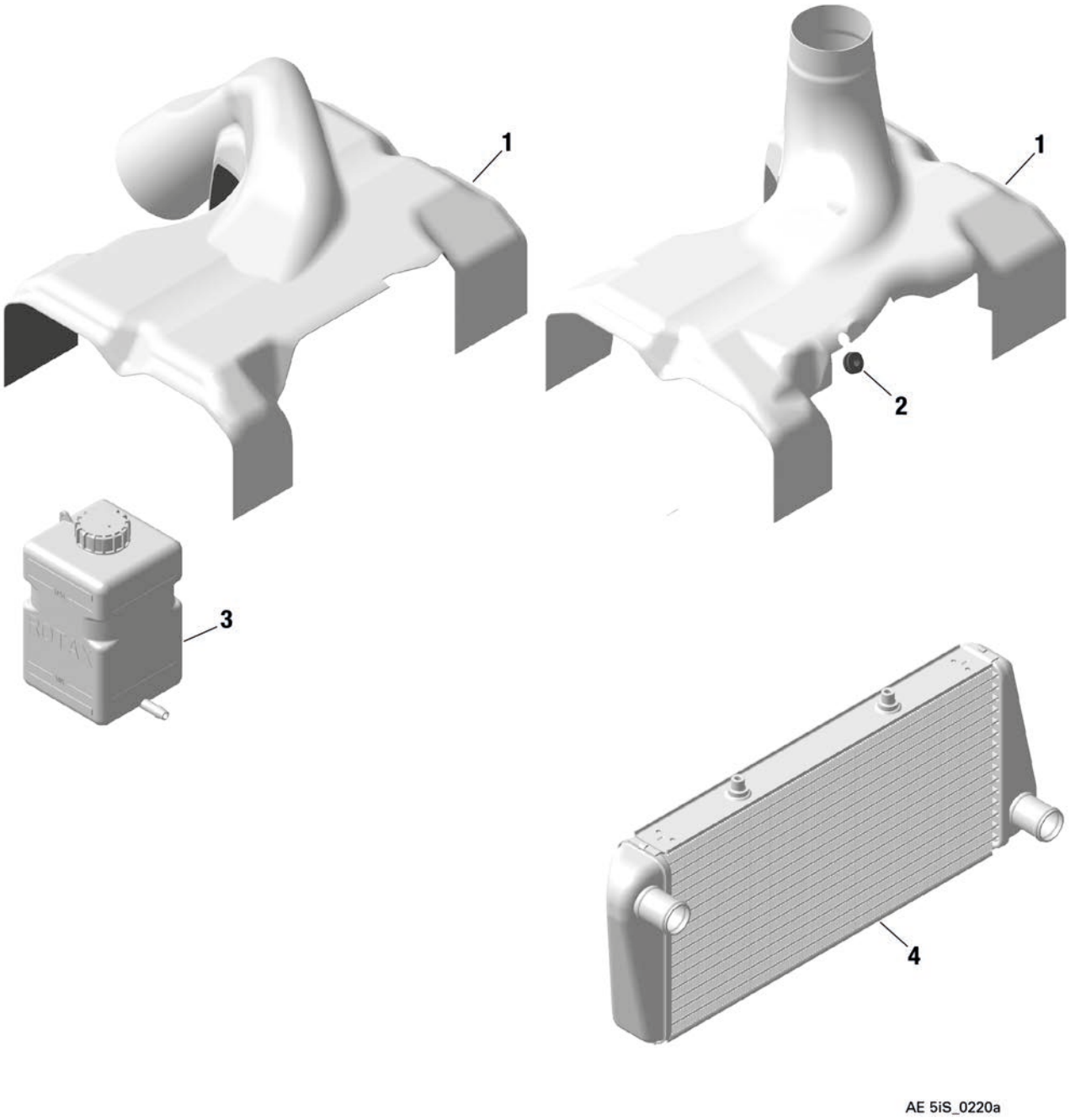

Figure 10.3: 75-20-00

					Parts per Engine		
Item No.	Status	Part No.	Indent	Description	915 iS A	915 iSc A	SI-PAC
1	N s.v.	975793 975795	.1	COOLING AIR BAFFLE, TRACTOR WHITE	(1)	(1)	
1	N s.v.	975794 975799	.1	COOLING AIR BAFFLE, TRACTOR BLACK	(1)	(1)	
1-2		975792	.1	COOLING AIR BAFFLE, PUSHER WHITE NC	(1)	(1)	
1-2		975798	.1	COOLING AIR BAFFLE, PUSHER BLACK NC	(1)	(1)	
2		201160	..2	RUBBER GROMMET	(1)	(1)	
3		922327	.1	OVERFLOW BOTTLE WITH CAP	1	1	009
4		997086	.1	RADIATOR NC	1	1	010

Chapter: 76–10–00
ENGINE CONTROL UNIT, FUSE BOX REGULATOR

TOPICS IN THIS CHAPTER

ENGINE CONTROL UNIT, FUSE BOX, REGULATOR 2

ENGINE CONTROL UNIT, FUSE BOX, REGULATOR

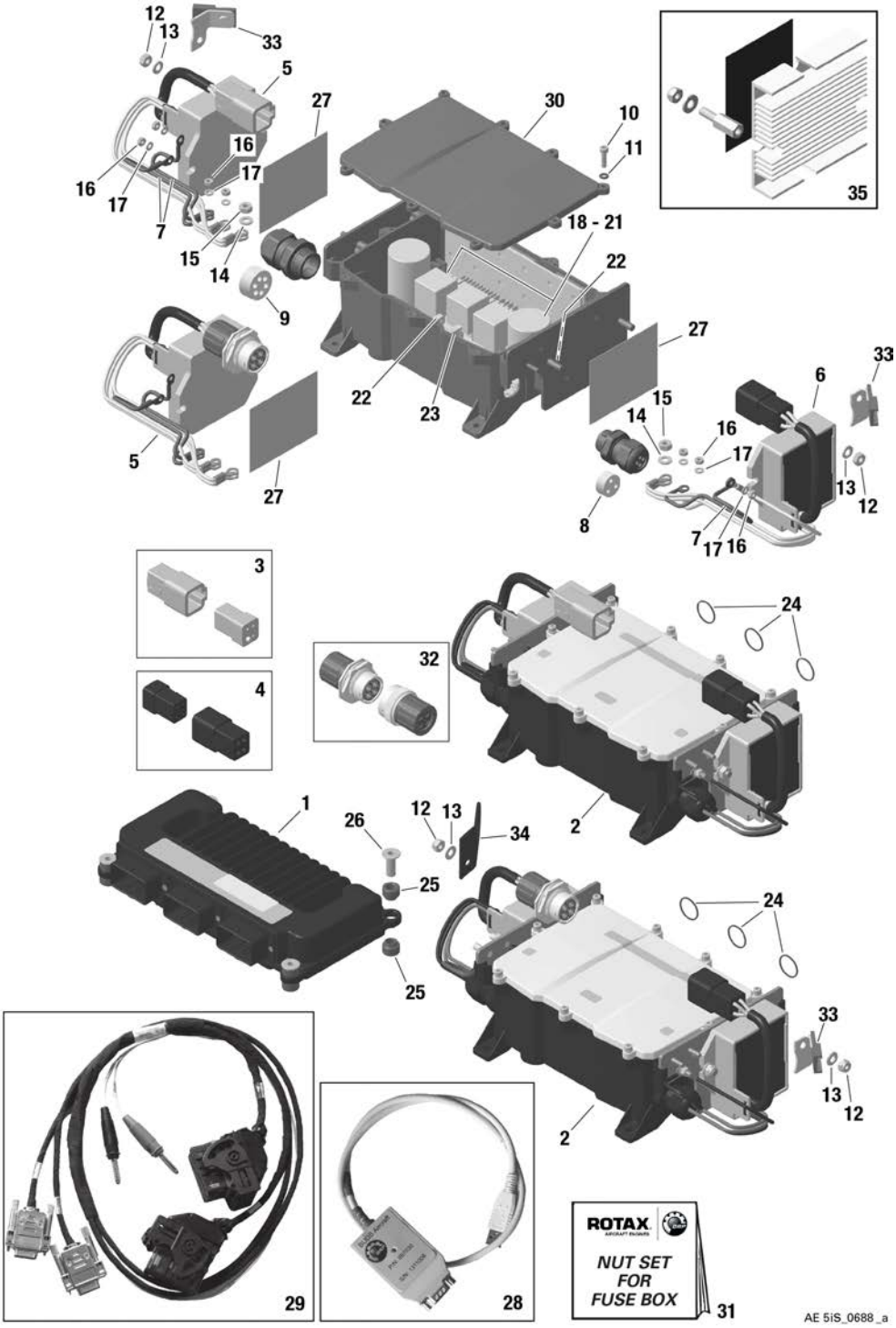

Figure 11.1: 76-10-00

					Parts per Engine		
Item No.	Sta-tus	Part No.	In-dent	Description	915 iS A	915 iSc A	SI-PAC
1		881254	.1	ENGINE CONTROL UNIT ASSY.	1e	1e	
2, 31	N	881325	.1	FUSE BOX WRAPPED UP (665648 + packaging)	1d	1d	
2, 31	s.v.	881321	.1	FUSE BOX WRAPPED UP (665646 + packaging)	1	1	
3		866422	.1	CONNECTOR SET GREY	1a	1a	
4		866420	.1	CONNECTOR SET BLACK	1a	1a	
5		864395	.1	REGULATOR B-CONNECTOR GREY	1	1	
5		864397	.1	REGULATOR B WITH AMPHENOL CONNECTOR	1	1	
6		864392	.1	REGULATOR A-CONNECTOR BLACK	1	1	
7		866440	.1	MASS CABLE ASSY.	3	3	
8		201370	.1	SKINTOP CLICK 20 GASKET	1	1	
9		201375	.1	SKINTOP CLICK 25 GASKET	1	1	
10		840763	.1	ALLEN SCREW M4x16 ISO 4762-A2-70	9	9	
11		827230	.1	PLASTIC WASHER M4	9	9	
12		842042	.1	LOCK NUT M6	4	4	
13		244213	.1	WASHER 6.4	2	2	
14		927573	.1	WASHER 5.3	2	2	
15		842033	.1	LOCK NUT M5	2	2	
16		242538	.1	LOCK NUT M4-A2	6	6	
17		244078	.1	WASHER 4.3	6	6	
18		866450	.1	MINI-FUSE 2A	2	2	
19		866452	.1	MINI-FUSE 5A	11	11	
20		866454	.1	MINI-FUSE 7.5A	2	2	
21		866456	.1	MINI-FUSE 10A	7	7	
22		866490	.1	ATO-FUSE 20A	1	1	
23		866492	.1	ATO-FUSE 35A	1	1	
24		931110	.1	SEALING RING	3	3	
25		201460	.1	RUBBER SLEEVE	8	8	

					Parts per Engine		
Item No.	**Sta-tus**	**Part No.**	**In-dent**	**Description**	**915 iS A**	**915 iSc A**	**SI-PAC**
26		947540	.1	SPACER	4	4	
27		282870	.1	HEAT TRANSFER PAD 65x80x0.5 MM	2	2	
28		xxx	.1	B.U.D.S. SET LEVEL 1 for pilots/user, see chapter 00-00-00 NC	1	1	
28		xxx	.1	B.U.D.S. SET LEVEL 2 for maintenance personnel, see chapter 00-00-00 NC	1	1	
28		xxx	.1	B.U.D.S. SET LEVEL 3 for distributors/OEM, see chapter 00-00-00 NC	1	1	
29		xxx	.1	SERVICE WIRING HARNESS ASSY. see chapter 00-00-00 NC	1	1	
30		201690	.1	COVER, FUSE BOX	1	1	
31		881555	.1	NUT SET FUSE BOX	1	1	
		-	..2	LOCK NUT M4	6	6	
		-	..2	WASHER 4.3	6	6	
		-	..2	LOCK NUT M6	3	3	
		-	..2	WASHER 6.2/14/3	3	3	
32		481510	.1	CONNECTOR SET (STATOR LANE B)	1b	1b	
33		951983	.1	CONNECTOR BRACKET ASSY. NC	2	2	011

					Parts per Engine		
Item No.	**Sta-tus**	**Part No.**	**In-dent**	**Description**	**915 iS A**	**915 iSc A**	**SI-PAC**
34		951981	.1	CONNECTOR BRACKET ASSY. (STATOR LANE B) NC	1d	1d	011
35		481490	.1	HEAT SINK SET NC	(1c)	(1c)	019

a Connector set consisting of all parts for regulator and stator side, DEUTSCH connector

b Consists of all parts for regulator and stator side, Amphenol connector

c Regulator B, for better cooling

d Amphenol connector

e See latest version of SI-915 i-004

INTENTIONALLY LEFT
BLANK

Chapter: 76–50–00
WIRING HARNESS

TOPICS IN THIS CHAPTER

WIRING HARNESS.....2

WIRING HARNESS

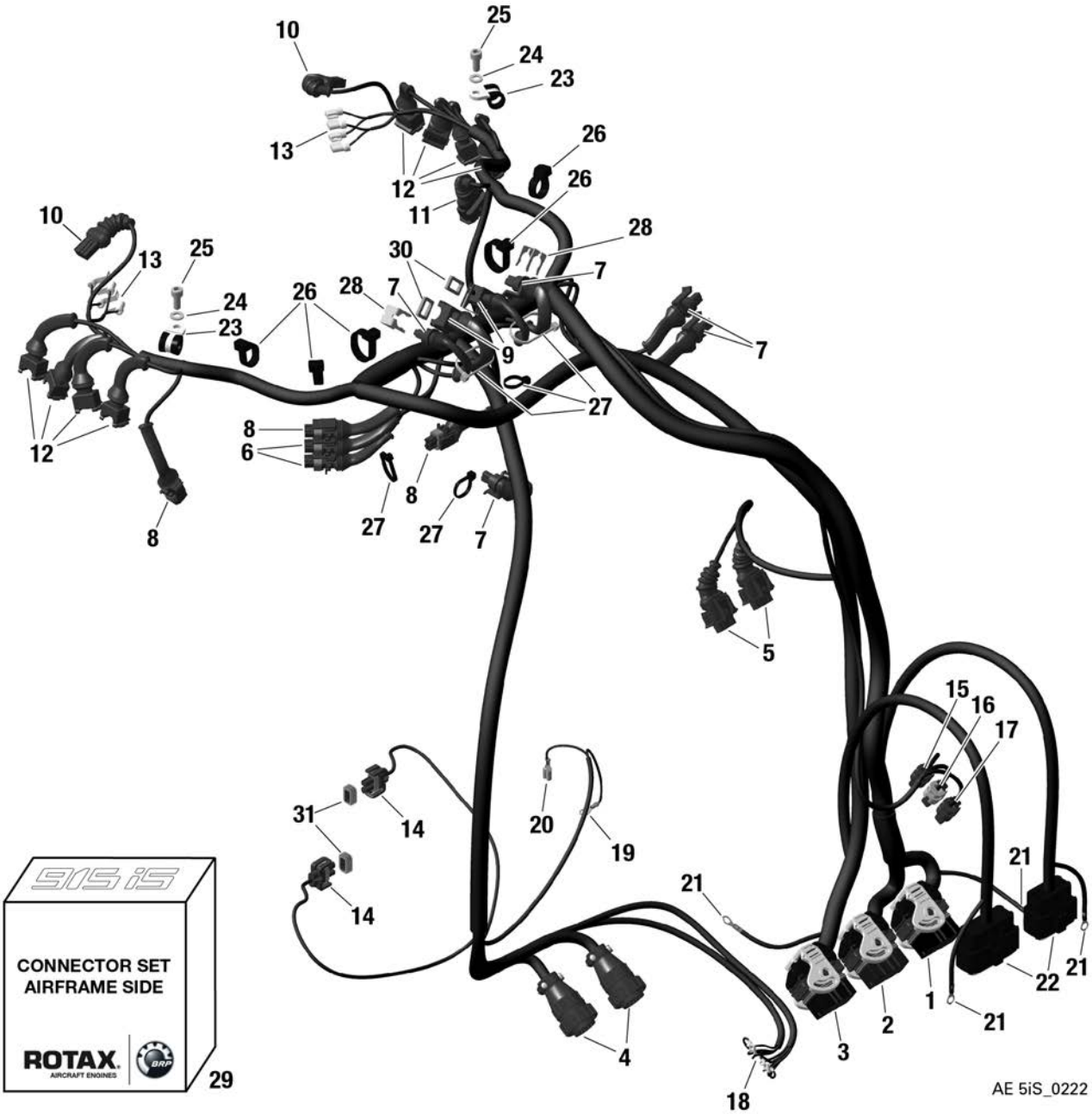

Figure 12.1: 76-50-00

					Parts per Engine		
Item No.	Sta-tus	Part No.	In-dent	Description	915 iS A	915 iSc A	SI-PAC
1-21	N	665586	.1	WIRING HARNESS PACKAGED	1c	1c	
1-21		665577	..2	WIRING HARNESS	1	1	
1	n.a.		..2	ECU LANE A1 CONNECTOR	1	1	
2	n.a.		..2	ECU LANE A2 CONNECTOR	1	1	
3	n.a.		..2	ECU LANE B CONNECTOR	1	1	
4		881312	..2	FUSE BOX CONNECTOR	2	2	
5		881306	..2	AAPTS CONNECTOR	2	2	
6		881298	..2	CPS CONNECTOR	2	2	
7		881302	..2	CONNECTOR SET OPS, AND MAPS	5a	5a	
8		881296	..2	CTS A OTS A KNOCK CONNECTOR	3	3	
9		881292	..2	MATS CONNECTOR	2	2	
10		481455	..2	EGT CONNECTOR	2	2	
11		881308	..2	TPS CONNECTOR	1	1	
12		881300	..2	INJ CONNECTOR	8	8	
13		881310	..2	IGNITION COIL CONNECTOR	1	1	
14		881304	..2	FUEL PUMP CONNECTOR	2	2	
15		481452	..2	CONNECTOR PCV A	1	1	
16		481453	..2	CONNECTOR PCV B	1	1	
17		481454	..2	CONNECTOR PCV C	1	1	
18		965701	..2	CABLE SHOE M4	9	9	
19		964059	..2	CABLE SHOE M6	1	1	
20		864011	..2	FASTON CONNECTOR 6.3x0.8	1	1	
21		966057	..2	RING TERMINAL	4	4	
22		881294	.1	CONNECTOR SET HIC A + HIC B	1	1	
23	N s.v.	251692 251691	.1	CABLE CLAMP 12/M6	2	2	
24	N s.v.	827962 827961	.1	WASHER 6.4	2	2	
25	N s.v.	840392 840391	.1	ALLEN SCREW M6x14	2	2	

					Parts per Engine		
Item No.	**Sta-tus**	**Part No.**	**In-dent**	**Description**	**915 iS A**	**915 iSc A**	**SI-PAC**
26		866716	.1	TIE WRAP 203x7.6 MM	5	5	
27		866714	.1	TIE WRAP 142x3.2 MM	5	5	
28		638140	.1	CLAMP	2	2	
29		881240	.1	CONNECTOR SET NC	1b	1b	012
30		850610	.1	CONNECTOR GASKET	2d	2d	
31		850620	.1	CONNECTOR GASKET	2e	2e	

a 2x for BPS inclusive

b HIC A, HIC B and FUSE BOX 3-pole

c with rubber seals for fuel pump connector

d for MATS connector

e for fuel pump connector

Chapter: 78–10–00
EXHAUST SYSTEM, EXHAUST TEMPERATURE SENSOR

TOPICS IN THIS CHAPTER

EXHAUST SYSTEM, EXHAUST TEMPERATURE SENSOR 2

EXHAUST SYSTEM, EXHAUST TEMPERATURE SENSOR

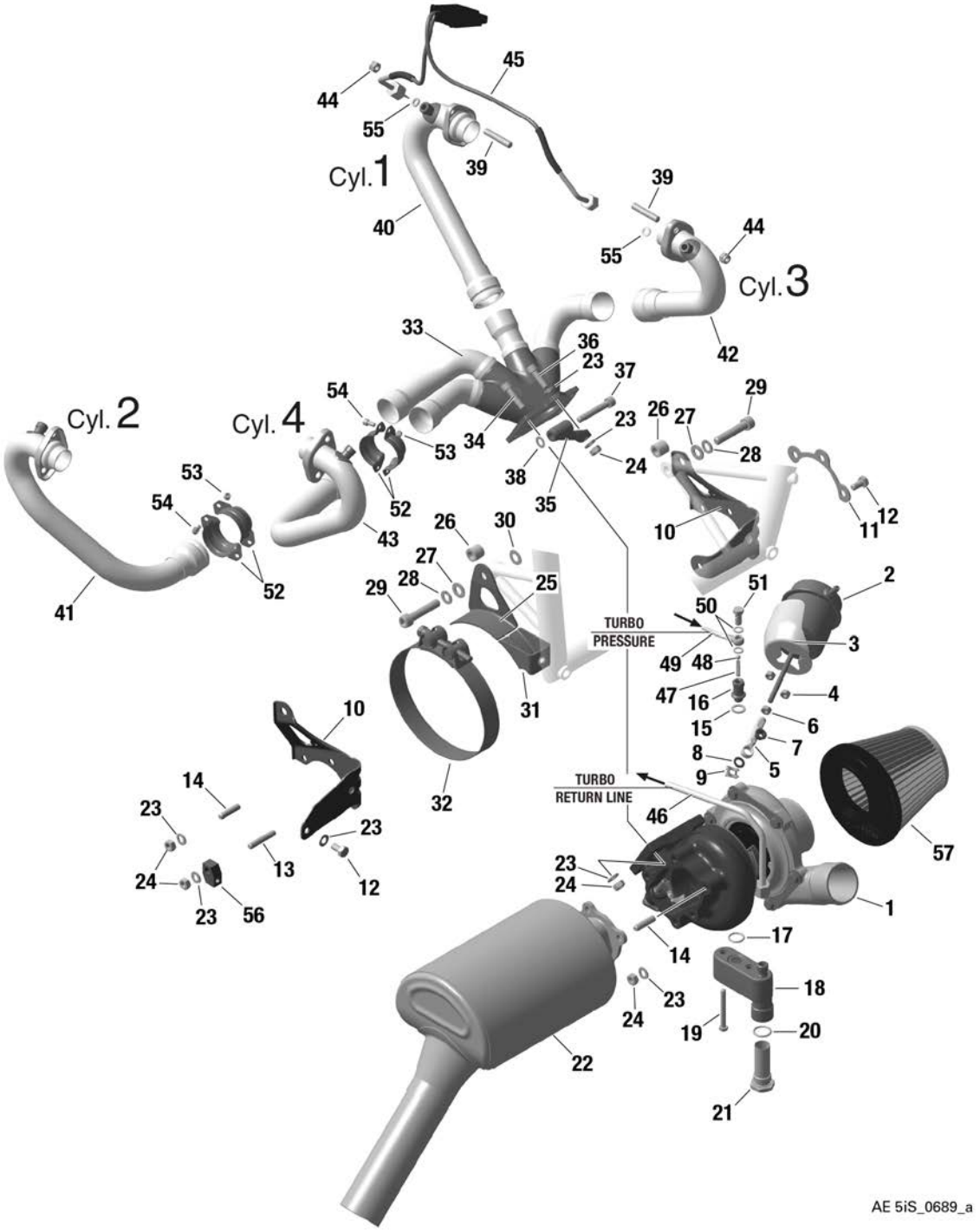

Figure 13.1: 78-10-00

					Parts per Engine		
Item No.	Sta-tus	Part No.	In-dent	Description	915 iS A	915 iSc A	SI-PAC
1	N	893100	.1	TURBOCHARGER ASSY. (893106 + packaging)	1	1	
1		893106	..2	TURBOCHARGER ASSY.	1	1	
2		667840	..2	WASTEGATE ACTUATOR	1	1	
3		975160	..2	HEAT SHIELD	1	1	
4		942245	..2	LOCK NUT 1/4-28 UNF	2	2	
5		971840	..2	ROD END	1	1	
6		842435	..2	HEX. NUT 1/4-28 UNF	1	1	
7		933681	..2	BUSHING	1	1	
8		944950	..2	WASHER 8.3/14.3/0.91	1	1	
9		845820	..2	RETAINER CLIP	1	1	
10	N s.v.	851297 851296	.1	TURBOCHARGER BRACKET	1a 1	1a 1	
11		851305	.1	REINFORCEMENT SHEET	1	1	
12		940583	.1	HEX. SCREW M8x16 STAINLESS STEEL	4a	4a	
13		641343	.1	STUD M8x30/13	1a	1a	
14		940173	.1	STUD M8x19.5/13	5	5	
15	N s.v.	250646 250640	.1	SEALING RING A 12x18-CU	1	1	
16		956489	.1	VALVE HOUSING	1	1	
17		430225	.1	O-RING 15.9-2.3	1	1	
18		656770	.1	OIL SUMP ASSY.	1	1	
19		640601	.1	ALLEN SCREW M6x50	2	2	
20		250055	.1	O-RING 18x2.5-N, FPM 75	1	1	
21		640860	.1	PLUG SCREW ASSY. M22x1.5	1	1	
22	N	979479	.1	MUFFLER ASSY. BRUSHED	1	1	
22	s.v.	979475	.1	MUFFLER ASSY.	1	1	
23		250313	.1	WASHER 8.4 STAINLESS STEEL	12a	12a	
24		242203	.1	HEX. NUT M8 STAINLESS STEEL	9	9	
25		851680	.1	EXHAUST BRACKET	1	1	

					Parts per Engine		
Item No.	**Sta-tus**	**Part No.**	**In-dent**	**Description**	**915 iS A**	**915 iSc A**	**SI-PAC**
26		xxx	.1	SPACER 10.5/17/15 see chap. 71-20-00	2	2	
27		xxx	.1	WASHER 10.5 see chap. 71-20-00	2	2	
28		xxx	.1	LOCK WASHER A10 see chap. 71-20-00	2	2	
29		xxx	.1	ALLEN SCREW M10x50 see chap. 71-20-00	2	2	
30		xxx	.1	THRUST WASHER 10.1/20/1.0 see chap. 71-20-00	AR	AR	
31	N s.v.	851685 851682	.1	EXHAUST BRACKET	1	1	
32		851445	.1	CLAMP 74-79	1	1	
33	N s.v.	979562 979561	.1	EXHAUST MANIFOLD ASSY.	1	1	
34		840993	.1	ALLEN SCREW M8x30	4	4	
35		953306	.1	MANIFOLD BRACKET ASSY.	1	1	
36		240073	.1	ALLEN SCREW M8x20	1	1	
37		440107	.1	ALLEN SCREW M8x50	1	1	
38		926400	.1	WASHER 8.4/15/0.5	AR	AR	
38		926401	.1	WASHER 8.4/15/1	AR	AR	
38		926402	.1	WASHER 8.4/15/1.5	AR	AR	
39		940368	.1	STUD M8x23/20	8	8	
40		979502	.1	EXHAUST PIPE ASSY. CYL. 1	1	1	
41		979512	.1	EXHAUST PIPE ASSY. CYL. 2	1	1	
42		979522	.1	EXHAUST PIPE ASSY. CYL. 3	1	1	
43		979533	.1	EXHAUST PIPE ASSY. CYL. 4	1	1	
44		842950	.1	LOCK NUT M8-SW12	8	8	
45		866262	.1	TEMPERATURE SENSOR	2	2	
46		xxx	.1	TURBO OIL SUCTION LINE see chap. 79–20–00	1	1	
47		239131	.1	COMPRESSION SPRING 22.0	1	1	
48		232440	.1	BALL 5.556 MM	1	1	

					Parts per Engine		
Item No.	**Sta-tus**	**Part No.**	**In-dent**	**Description**	**915 iS A**	**915 iSc A**	**SI-PAC**
49		xxx	.1	TURBO PRESSURE OIL LINE see chap. 79–20–00	1	1	
50		950141	.1	SEALING RING A 8x13	2	2	
51		840730	.1	BANJO BOLT M8x1x17	1	1	
52		979570	.1	EXHAUST PIPE CLAMP (Cyl. 2 and 4)	4	4	
53		901442	.1	HEX. NUT ISO 7042 - M5 - A2 (Cyl. 2 and 4)	4	4	
54		240153	.1	ALLEN SCREW M5X10 ISO 4762-A2-70 (Cyl. 2 and 4)	4	4	
55		244213	.1	WASHER 6.4	4	4	
56		953280	.1	SUPPORT PLATE	1a	1a	
57		xxx	.1	AIRFILTER see chapter 73–10–00 NC	1		006

a For turbocharger bracket 851297

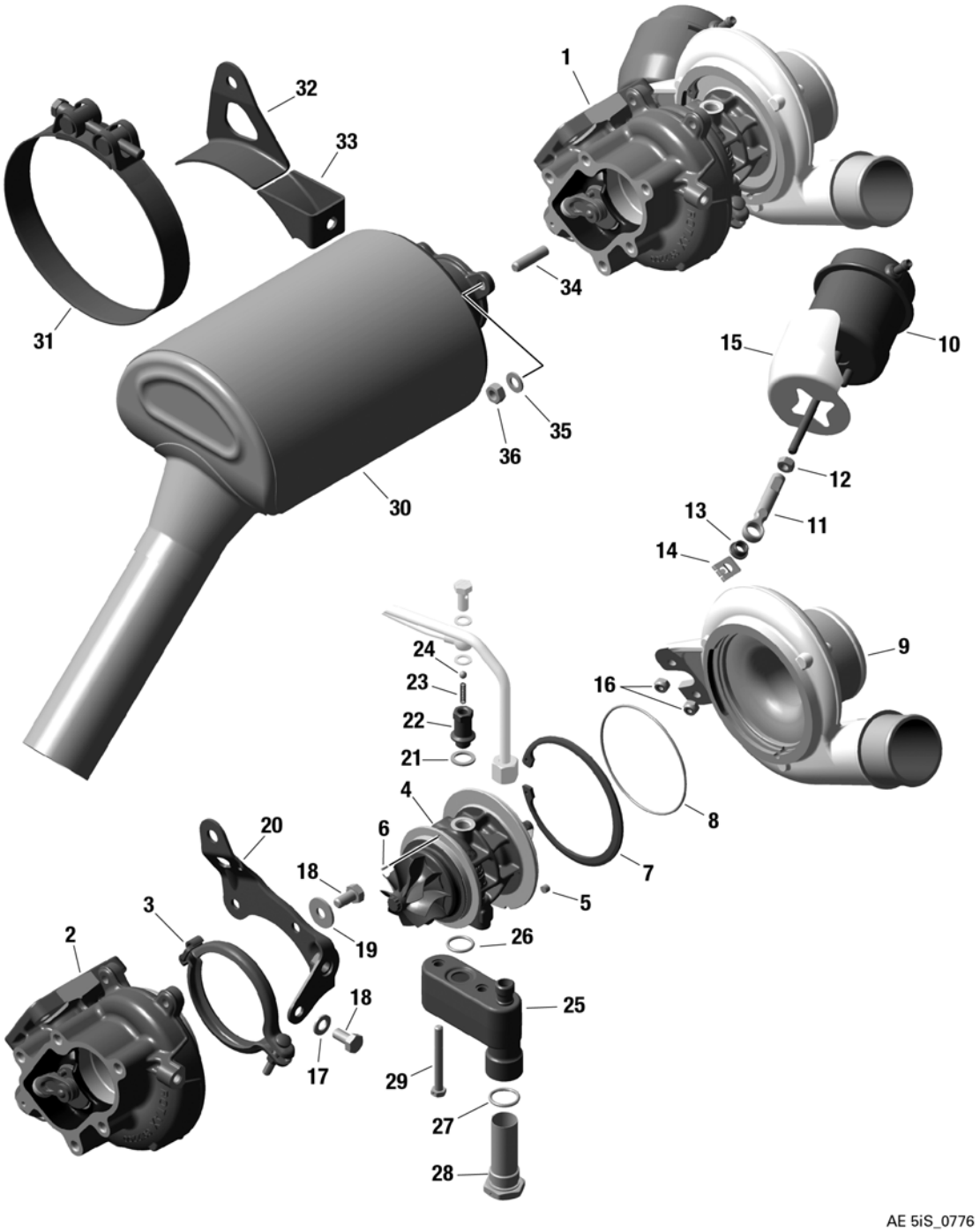

Figure 13.2: 78-10-00, TURBOCHARGER MY20

TURBOCHARGER MY20					Parts per Engine		
Item No.	Sta-tus	Part No.	In-dent	Description	915 iS A	915 iSc A	SI-PAC
1 (2-16)		893108	.1	TURBOCHARGER ASSY.	1	1	
2		912201	..2	TURBINE HOUSING ASSY.	1	1	
3		651873	..2	PROFILE CLAMP 83 MM	1	1	
4		864115	..2	TURBO CARTRIDGE ASSY.	1	1	
5		929320	..2	GUIDE PIN	1	1	
6		629330	..2	NEEDLE PIN 2X6 EN ISO 8734	1	1	
7		651866	..2	RETAINING RING	1	1	
8		850540	..2	O-RING SIMILAR TO DIN 3771-83X2-N, FPM75	1	1	
9		910750	..2	COMPRESSOR HOUSING	1	1	
10 (10-12)		867380	..2	ACTUATOR ASSY. (WASTEGATE)	1	1	
11		XXXXX1	...3	xxx	1	1	
12		XXXXX2	...3	xxx	1	1	
13		933682	..2	BUSHING	1	1	
14		845005	..2	CIRCLIP	1	1	
15		975150	..2	HEAT SHIELD	1	1	
16		842041	..2	LOCK NUT M6 - 6.6	2	2	
17		250313	.1	WASHER 8.4 STAINLESS STEEL	1	1	
18		940583	.1	HEX. SCREW M8X16 STAINLESS STEEL	3	3	
19		626333	.1	WASHER 8.4 DIN 9021 A2	2	2	
20		851299	.1	TURBOCHARGER BRACKET METRIC	1	1	
20		851283	.1	TURBOCHARGER BRACKET UNF	1	1	
21		250640	.1	SEALING RING A 12X18-CU DIN 7603	1	1	
22		956482	.1	VALVE HOUSING	1	1	
23		239131	.1	COMPRESSION SPRING 22.0	1	1	

TURBOCHARGER MY20					Parts per Engine		
Item No.	Sta-tus	Part No.	In-dent	Description	915 iS A	915 iSc A	SI-PAC
24		232440	.1	BALL 5.556 MM	1	1	
25		656770	.1	OIL SUMP ASSY.	1	1	
26		430225	.1	O-RING 15.9-2.3	1	1	
27		250055	.1	O-RING DIN 3771-18X2.5-N, FPM 75	1	1	
28		640860	.1	PLUG SCREW ASSY. M22x1.5	1	1	
29		640601	.1	HEX.SCREW ISO 4014 - M6X55 - 8.8	2	2	
30		979478	.1	MUFFLER ASSY.	1	1	
31		851445	.1	CLAMP 140-148	1	1	
32		851860	.1	RETAINING PLATE	1	1	
33		851685	.1	RETAINING PLATE	1	1	
34		940173	.1	STUD M8X19.5/13	5	5	
35		250313	.1	WASHER 8.4 STAINLESS STEEL	5	5	
36		242203	.1	HEX.NUT M8 STAINLESS STEEL	5	5	

Chapter: 79–20–00
OIL TANK, OIL PUMP ASSY., OIL FILTER, OIL TEMPERATURE SENSOR, OIL PRESSURE SENSOR, OIL SPRAY NOZZLE ASSY.

TOPICS IN THIS CHAPTER

OIL TANK 2
OIL PUMP ASSY., OIL FILTER, OIL TEMPERATURE SENSOR, OIL PRESSURE SENSOR 5
OIL TEMPERATURE SENSOR, OIL PRESSURE SENSOR, OIL SPRAY NOZZLE ASSY. 8
OIL RADIATOR 10

OIL TANK

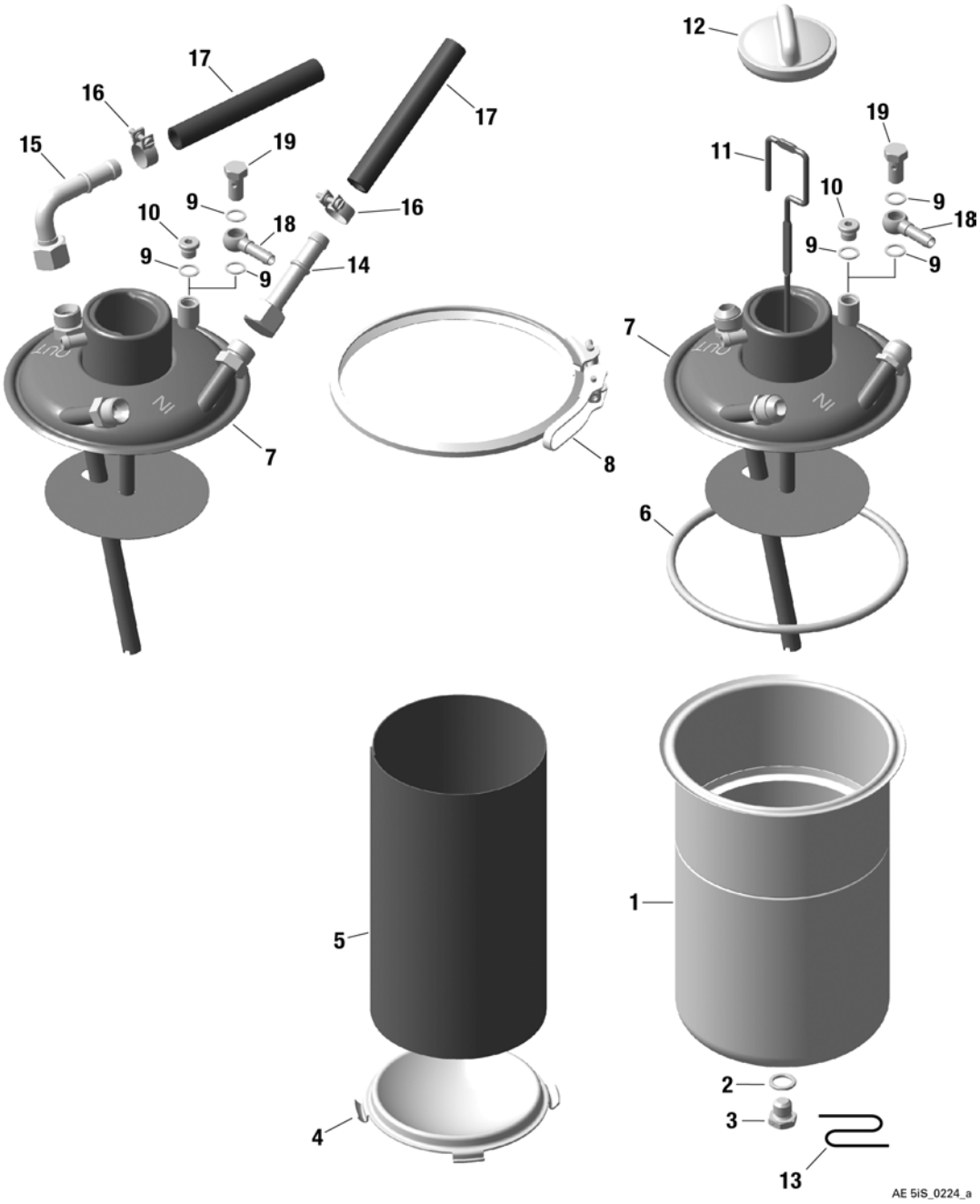

Figure 14.1: 79-20-00

Item No.	Sta-tus	Part No.	In-dent	Description	Parts per Engine 915 iS A	Parts per Engine 915 iSc A	SI-PAC
1-12	N s.v.	656222 656854	.1	OIL TANK ASSY UNF BIG NC	(1b) (1a)	(1b) (1a)	018
1-12	N s.v.	656224 656852	.1	OIL TANK ASSY. UNF standard	1b 1a	1b 1a	
1-12	N s.v.	656226 656880	.1	OIL TANK ASSY. METRIC standard	1d 1c	1d 1c	
1	n.a.	xxx	..2	OIL TANK standard	(1)	(1)	
1	n.a.	xxx	..2	OIL TANK BIG NC	1	1	
2		250010	..2	GASKET RING C 12x18	1	1	
3		241408	..2	HEX. SCREW M12x12	1	1	
4		656861	..2	PARTITION 2	1	1	
5		956204	..2	BAFFLE INSERT standard	1	1	
5		956205	..2	BAFFLE INSERT BIG	1	1	
6		850491	..2	O-RING 145x6-N, HNBR 70	1	1	
7	n.a.	xxx	..2	OIL TANK COVER ASSY. UNF standard	(1)	(1)	
7	n.a.	xxx	..2	OIL TANK COVER ASSY. METRIC standard	(1)	(1)	
7	n.a.	xxx	..2	OIL TANK COVER ASSY. UNF BIG	(1)	(1)	
8		951817	..2	PROFILE CLAMP 163	1	1	
9		230150	..2	SEALING RING A 10x14	1	1	
10		641733	..2	PLUG SCREW M10X1 DIN 908-A2-70	1	1	
11		956152	..2	OIL DIPSTICK STANDARD	1	1	
11		956154	..2	OIL DIPSTICK BIG	1	1	
12		974647	.1	OIL TANK COVER, WITHOUT VENTING standard tank	(1)	(1)	
12		974650	..2	OIL TANK COVER, WITHOUT VENTING BIG tank	(1)	(1)	
13		297555	.1	SAFETY WIRE 0.8	1	1	

					Parts per Engine		
Item No.	Sta-tus	Part No.	In-dent	Description	915 iS A	915 iSc A	SI-PAC
14		956610	.1	HOSE NIPPLE WITH UNION NUT NC	ARe	ARe	013
15		956580	.1	BENT SOCKET NC	ARe	ARe	013
16	N	951826	.1	HOSE CLAMP NC	AR	AR	013
17	N n.a.	956394 956390	.1	OIL TUBE 12x19 NC	AR	AR	013
18		956314	.1	HOSE NIPPLE 4/6	1	1	013
19		940874	.1	BANJO BOLT M10X1X19	1	1	013

a Connection IN 3/4-16 UNF (AN-8), OUT 3/4-16 UNF (AN-8)

b Connection IN 3/4-16 UNF (AN-8), OUT 7/8-14 UNF (AN-10)

c Connection IN M18x1.5, OUT M18x1.5

d Connection IN M18x1.5, OUT M22x1.5

e M18x1.5

OIL PUMP ASSY., OIL FILTER, OIL TEMPERATURE SENSOR, OIL PRESSURE SENSOR

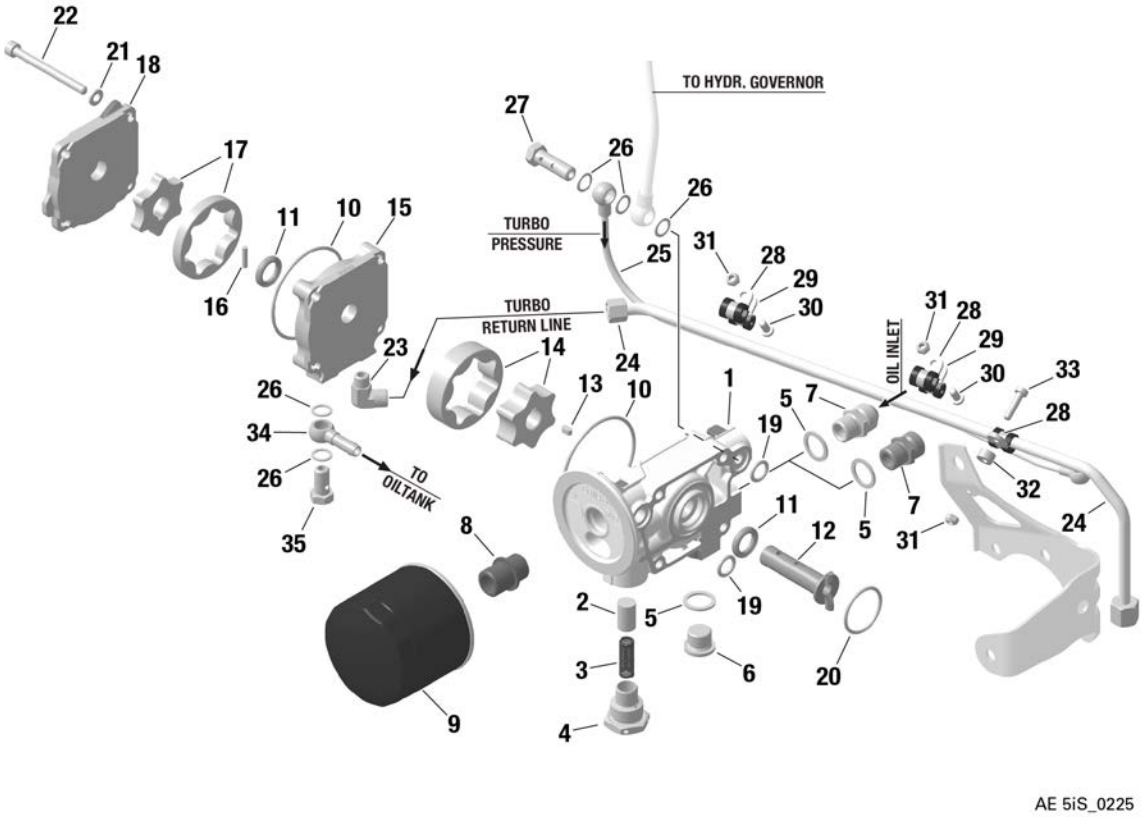

Figure 14.2: 79-20-00, TYPICAL

					Parts per Engine		
Item No.	**Sta-tus**	**Part No.**	**In-dent**	**Description**	**915 iS A**	**915 iSc A**	**SI-PAC**
1	N s.v.	811461 811460	.1	OIL PUMP HOUSING	1	1	
2		856330	.1	REGULATING PISTON	1	1	
3		838125	.1	COMPRESSION SPRING DM 8.85 D1.25 L52	1	1	
4		640850	.1	PLUG SCREW M22x1.5	1	1	
5		430622	.1	SEALING RING A 16x22	2	2	
6		240234	.1	PLUG SCREW A M16x1.5	1	1	
7	s.v.	956651	.1	ADAPTER 3/4-16 UNF/ M16x1.5	1a	1a	
7	N	956635	.1	ADAPTER 7/8-14 UNF/ M16x1.5	1b	1b	
7	s.v.	956655	.1	ADAPTER M18x1.5 / M16x1.5	1	1	
7	N	956605	.1	ADAPTER M22x1.5 / M16x1.5	1	1	
8		924430	.1	OIL FILTER NIPPLE	1	1	
9		825016	.1	OIL FILTER	1	1	
10		830372	.1	O-RING 63-2.5	2	2	
11		430102	.1	OIL SEAL A 14x22x4 FPM	2	2	
12		837295	.1	OIL PUMP SHAFT	1	1	
13		246580	.1	KEY A 4x4x8	1	1	
14		888821	.1	PRESSURE INNER AND OUTER ROTOR	1	1	
15	N	812194	.1	OIL PUMP HOUSING	1	1	
16		232731	.1	NEEDLE PIN 4x15.8 G3	1	1	
17		656850	.1	ROTOR SET	1	1	
18	N s.v.	911717 911713	.1	OIL PUMP COVER	1	1	
19		250460	.1	O-RING 11-2.7	2	2	
20		950410	.1	O-RING 30x2.5	1	1	
21	N s.v.	827962 827961	.1	WASHER 6.4	4	4	
22	N s.v.	241263 241261	.1	ALLEN SCREW M6x65	4	4	

					Parts per Engine		
Item No.	**Sta-tus**	**Part No.**	**In-dent**	**Description**	**915 iS A**	**915 iSc A**	**SI-PAC**
23		824020	.1	MALE STUD ELBOW M10x1	1	1	
24		656760	.1	TURBO OIL SUCTION LINE	1	1	
25		656765	.1	TURBO PRESSURE OIL LINE	1	1	
26		230150	.1	SEALING RING A 10x14	5	5	
27	N s.v.	940877 940873	.1	BANJO BOLT M10x1x34 BANJO BOLT M10x1x30	1	1	
28		851111	.1	CABLE CLAMP 8/M5	3	3	
29		851116	.1	CABLE CLAMP 5/M5	2	2	
30		241841	.1	ALLEN SCREW M5x12	2	2	
31	N n.a.	942021 942020	.1	LOCK NUT M5	3	3	
32		847664	.1	SPACER 5.2/11/6.0	1	1	
33		941540	.1	ALLEN SCREW M5x20	1	1	
34		956314	.1	HOSE NIPPLE 4/6	1	1	
35	N s.v.	940876 940874	.1	BANJO BOLT M10x1x23 BANJO BOLT M10x1x19	1	1	

a AN-8

b AN-10

OIL TEMPERATURE SENSOR, OIL PRESSURE SENSOR, OIL SPRAY NOZZLE ASSY.

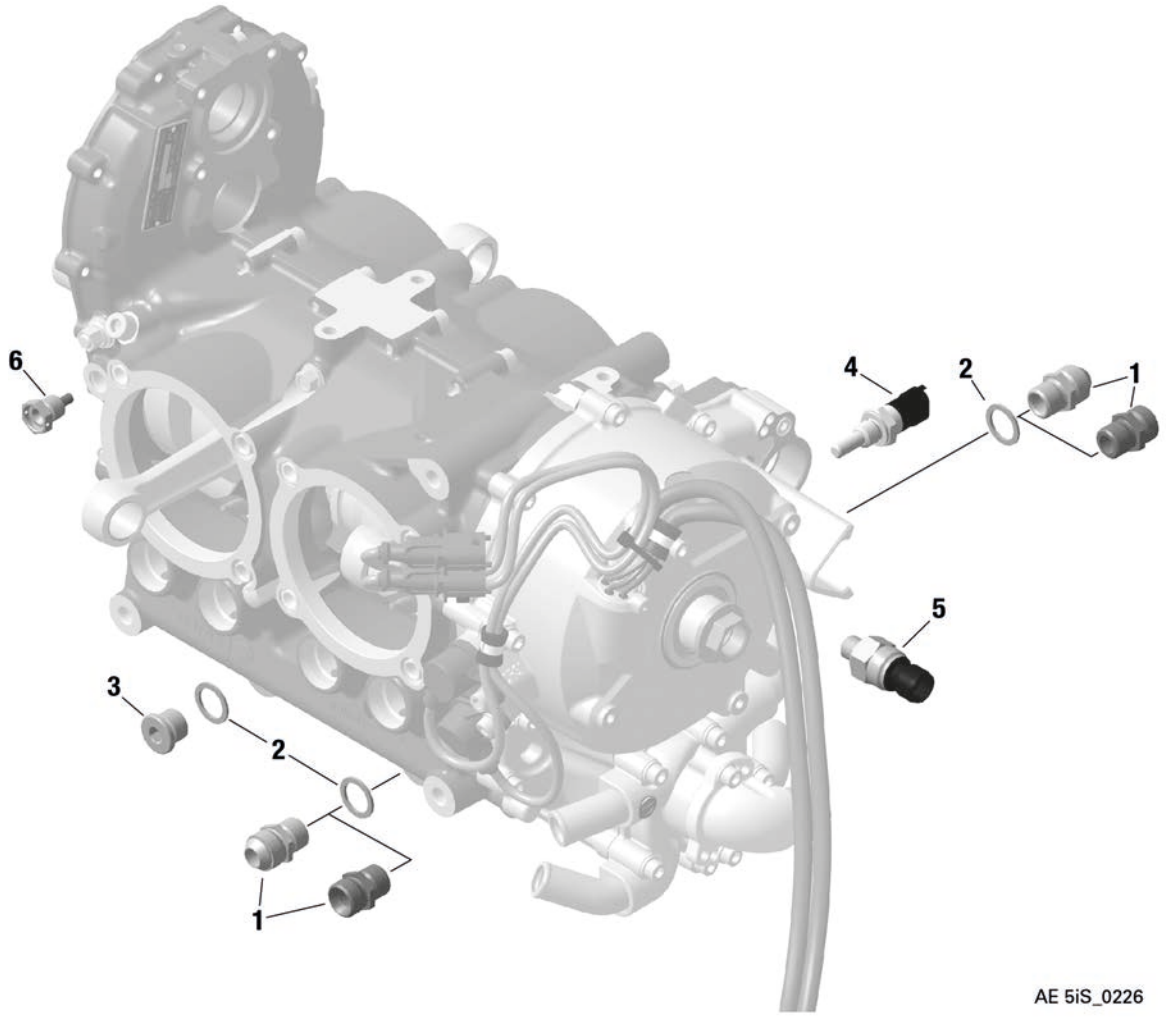

Figure 14.3: 79-20-00

					Parts per Engine		
Item No.	**Sta-tus**	**Part No.**	**In-dent**	**Description**	**915 iS A**	**915 iSc A**	**SI-PAC**
1	N s.v.	956652 956651	.1	ADAPTER 3/4-16 UNF/ M16x1.5	(2)a	(2)a	
1		956655	.1	ADAPTER M18x1.5 / M16x1.5	2	2	
2		430622	.1	SEALING RING A 16x22	3	3	
3		240234	.1	PLUG SCREW A M16x1.5	2	1	
4		965537	.1	TEMPERATURE SENSOR	1	1	
5		664365	.1	PRESSURE SENSOR 10	1	1	
6		241785	.1	MAGNETIC DRAIN PLUG M12x1.5	1	1	

a AN-8

OIL RADIATOR

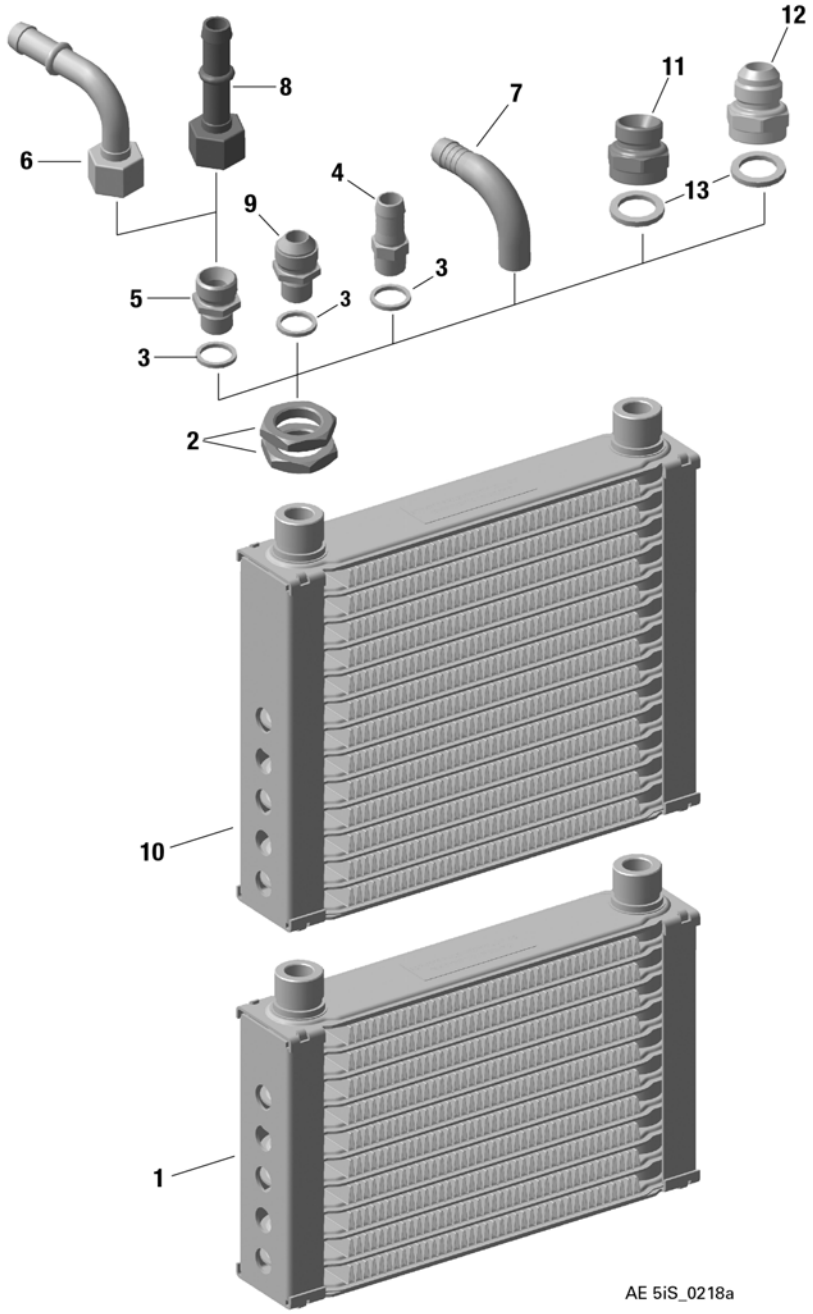

Figure 14.4: 79–20–00

					Parts per Engine		
Item No.	Sta-tus	Part No.	In-dent	Description	915 iS A	915 iSc A	SI-PAC
1,2, 3,9		886015	.1	OIL RADIATOR SET UNF NC	(1)	(1)	014
2,3 9,10		886016	.1	OIL RADIATOR SET UNF NC	(1)d		014
1,2, 3,4		886013	.1	OIL RADIATOR SET METRIC NC	(1)	(1)	014
2,3 4,10		886014	.1	OIL RADIATOR SET METRIC NC	(1)	(1)	014
1	N s.v.	886005 886004	.1	OIL RADIATOR NC	(1a)c	(1a)c	014
2		242873	.1	HEX. NUT M22x1.5 NC	(4)	(4)	013
2,3,9		956645	.1	SCREW CONNECTION SET UNF NC	(1)	(1)	013
3,5,8		956615	.1	SCREW CONNECTION SET STRAIGHT NC	(1)	(1)	013
3,5,6		956585	.1	SCREW CONNECTION SET BENT NC	(1)	(1)	013
3		230387	.1	GASKET RING 14.2/18/2 NC	(2)	(2)	013
4		840461	.1	NIPPLE 13.2/9.5–M14x1.5 NC	(2)	(2)	013
5		956577	.1	ADAPTER M18x1.5/M14x1.5 NC	(2)	(2)	013
6		956580	.1	BENT SOCKET ASSY. NC	AR	AR	013
7		924585	.1	ANGULAR TUBE M14x1.5 NC	AR	AR	013

					Parts per Engine		
Item No.	**Sta-tus**	**Part No.**	**In-dent**	**Description**	**915 iS A**	**915 iSc A**	**SI-PAC**
8		956610	.1	HOSE NIPPLE WITH UNION NUT NC	AR	AR	013
9		956643	.1	ADAPTER 3/4–16 UNF/M14x1.5 NC	(2)e	(2)e	013
10	N s.v.	886107 886106	.1	OIL RADIATOR NC	(1b)c	(1b)c	013
11	N	956685	.1	ADAPTER M22x1.5 / M22x1.5 NC	(2)	(2)	013
12	N	956680	.1	ADAPTER 7/8–14 UNF / M22x1.5 NC	(2)f	(2)f	013
13	N	250735	.1	GASKET RING A 14X20 NC	(2)	(2)	013

a cooling area 234 cm²

b cooling area 300 cm²

c height of connections 5 mm reduced

d for 915 iS Series up to S/N 9132271

e AN-8

f AN-10

Chapter: 80–10–00
ELECTRIC STARTER, STARTER RELAY

TOPICS IN THIS CHAPTER

ELECTRIC STARTER **2**

ELECTRIC STARTER

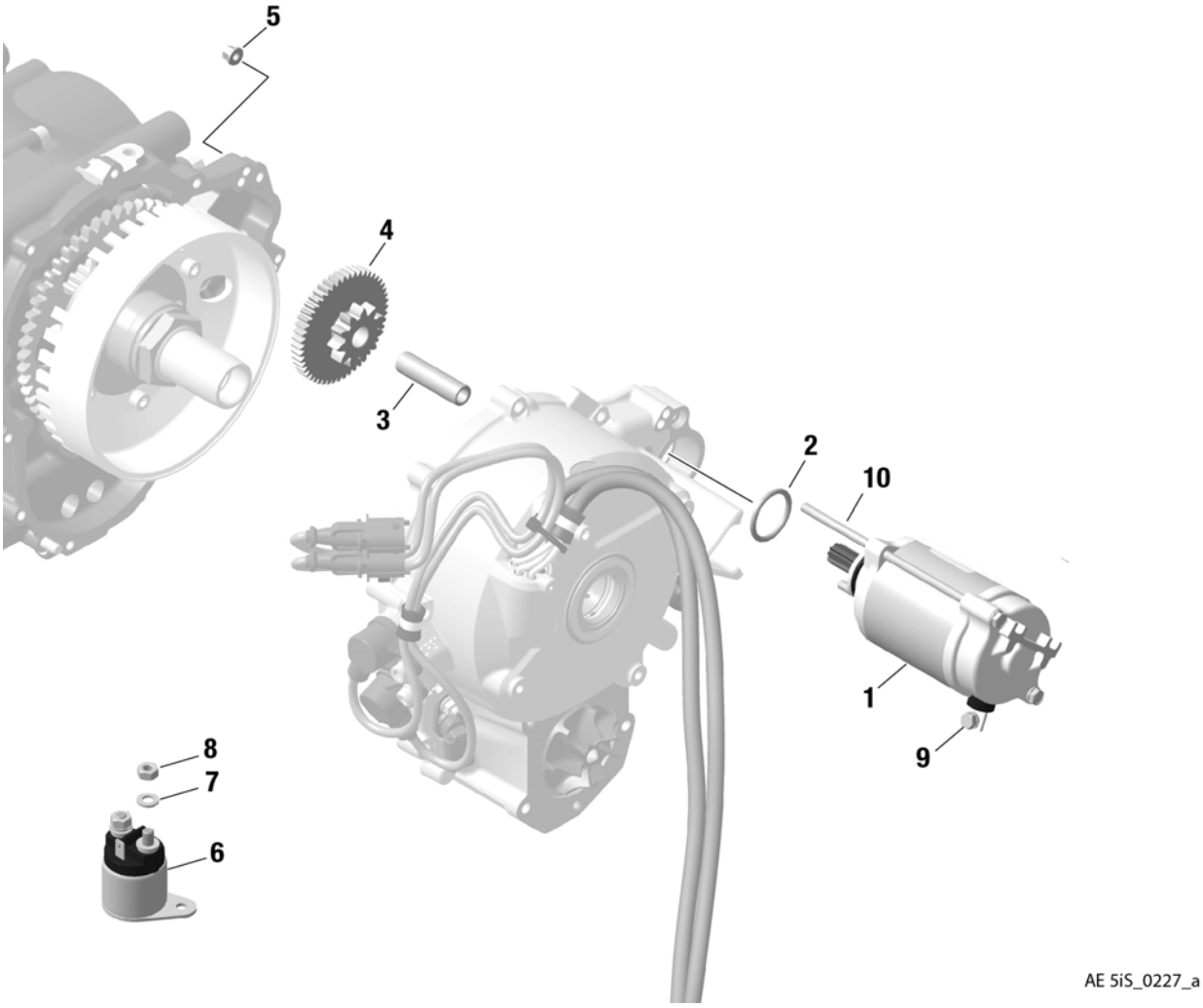

Figure 15.1: 80-10-00

					Parts per Engine		
Item No.	**Sta-tus**	**Part No.**	**In-dent**	**Description**	**915 iS A**	**915 iSc A**	**SI-PAC**
1-2		685667	.1	ELECTRIC STARTER ASSY. 12 V	1	1	
1-2		685672	.1	ELECTRIC STARTER ASSY. 24 V NC	(1)	(1)	015
2		250140	..2	O-RING DIN 3771-24.4x3.1-N NBR70	1	1	
3		837102	.1	IDLE GEAR SHAFT	1	1	
4		834156	.1	IDLE GEAR 50/11 T	1	1	
5		942311	..2	HEX. NUT M5	2	2	
6-8		992818	.1	STARTER RELAY ASSY.	1	1	017
7		945831	..2	LOCK WASHER A6	2	2	017
8		242214	..2	HEX. NUT M6	2	2	017
9		240457	.1	TERMINAL SCREW M5x8	1	1	
10		241132	.1	SET BOLT M5x143	2	2	

INTENTIONALLY LEFT
BLANK

Index

A

airbox 1–2
ARRANGEMENT FOR CONSTANT SPEED AND FIXED PITCH PROPELLER 2

C

Camshaft 6
cooling air baffle 7
Crankcase 2
Crankshaft 4
crankshaft position sensor assy. 2
Cylinder 4
cylinder head 6

D

Documentation, Labels, Repair sets 20

E

electric starter 1–2
engine control unit (ECU) 1–2
engine suspension frame 1–2
Engine view 4
exhaust system 1–2
exhaust temperature sensor 1–2
expansion tank 4
external alternator F3A 2

F

fuel injector 8
fuel pump 12
fuel rail 8
fuel rail cover 8
fuse box 2
fuse box regulator 1

G

General note 2

I

ignition cable 1–2
ignition coils 1–2
ignition housing 2
intake manifold 1–2
intercooler 5
Introduction, explanation, parts order 3

L

List of effective pages 1
Lubricants 18

O

oil filter 5
oil pressure sensor 5, 8
oil pump assy. 5
oil radiator 10
oil spray nozzle 8
oil tank 1–2
oil temperature sensor 5, 8
overload clutch 5

P

Parts order 3
Piston 4
pressure regulator 8
propeller gear assy. 2

R

regulator 2
Repair tools 8
Repeating symbols 5

S

spark plug 2
spark plug connector 1–2
spark plugs 1
Sprag Clutch 4
starter relay 1
stator 2
Structure 6

T

Table of amendments 1
throttle body socket 1–2

V

valve cover 6
valve train.....6

W

wastegate.....5
water pump.....1
wiring harness 1–2

ROTAX®

Engine serial no.

Type of aircraft

Aircraft registration no.

Rotax® authorized distributor

PEFC
PEFC/06-39-364/22

PEFC Certified

This product is from sustainably managed forests and controlled sources

www.pefc.org

FLYROTAX.COM

® and TM are trademarks of BRP-Rotax GmbH & Co KG.
© 2020 BRP-Rotax GmbH & Co KG. All rights reserved.

A BRP BRAND